Basic holder MS16 grooving slide, angle-adjustable

Technical data

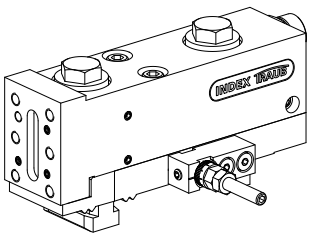

Slide system MS	MS16 grooving slide
Drive	not live
Fixation MS	W serration
Cooling	external
Pressure	80 bar
X [mm]	29 (1.14")
Y [mm]	–
Z [mm]	–
INDEX TRAUB products	MS16-6 • MS16-6 Plus

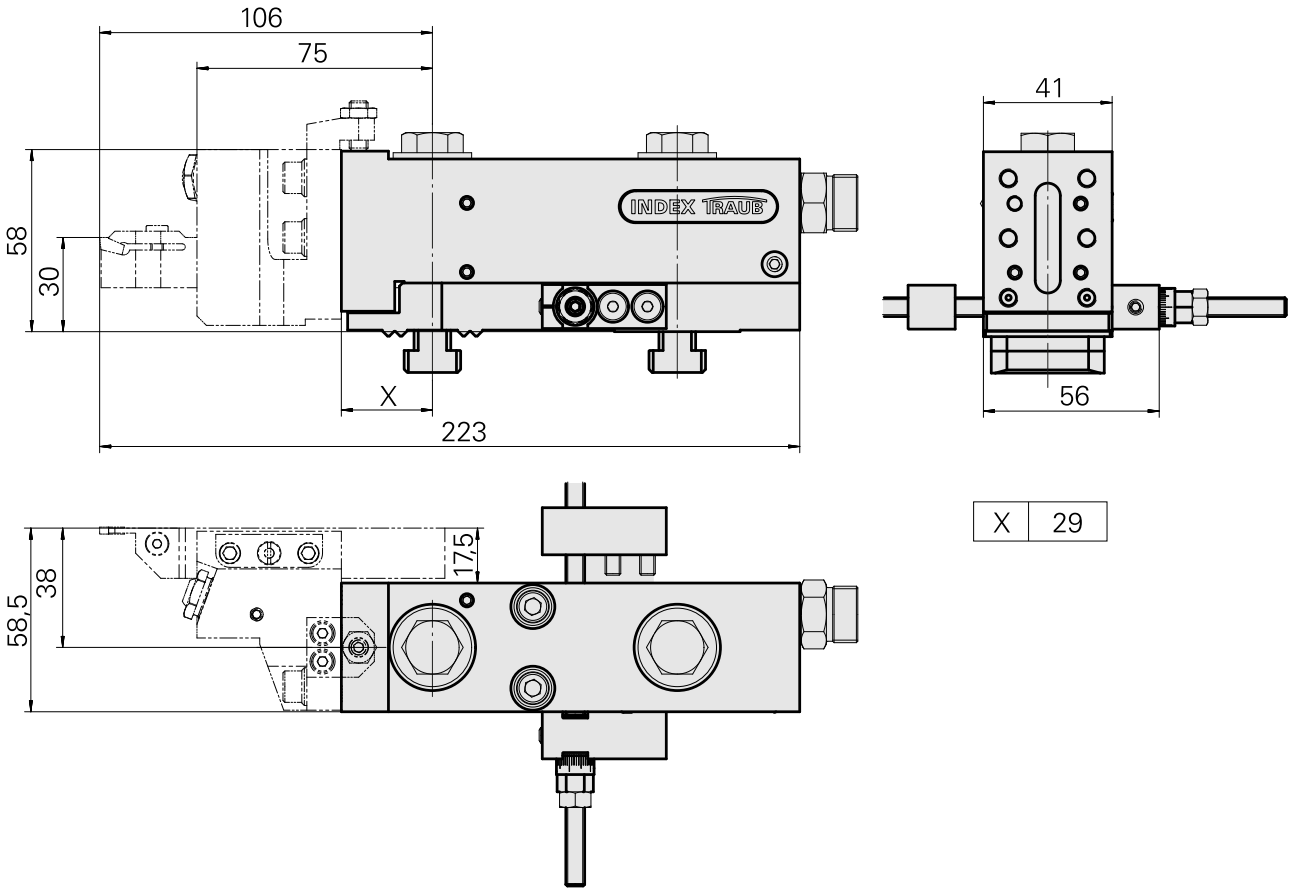

X	29

Documents

Product notes

EN (pdf)

DE (pdf)

FR (pdf)

Accessories

Optional accessories

MS tool holders

Grooving tool holding block Square 16x16, adjustable in Y direction

Product ID : 10320028
Previous product ID : W9990722

Drive	Cooling	Pressure	Direction
not live	external	80 bar	left-handed run
Mounting	**X [mm]**	**Y [mm]**	**Z [mm]**
Square 16x16	46 (1.81")	–	22 (0.87)
INDEX TRAUB products			
MS16-6 • MS16-6 Plus			

Grooving tool holding block Square 16x16, adjustable in Y direction

Product ID : 10600943
Previous product ID : W9990723

Drive	Cooling	Pressure	Direction
not live	external	80 bar	right-handed run
Mounting	**X [mm]**	**Y [mm]**	**Z [mm]**
Square 16x16	46 (1.81")	–	22 (0.87)
INDEX TRAUB products			
MS16-6 • MS16-6 Plus			

Other accessories

EX.SOC.PLUG/4Z-908 VSTI R 1/4-ED

Product ID : 10886676
Previous product ID : 410773.0025

Stop Feineinstellung; klein

Product ID : 10786502
Previous product ID : W9990769