Bohrhalter VDI 20 ER40, Form E4

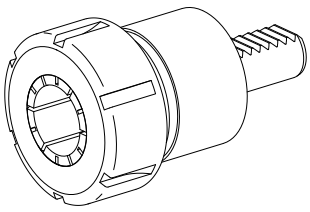

Technical data

Shank VDI	VDI 20
Drive	not live
Fixation VDI	none
Cooling	internal
Pressure	20 bar
Mounting	ER40
reversable 180°	no
Data carrier	check tool station bore
X [mm]	66.5 (2.62")
Y [mm]	–
Z [mm]	–

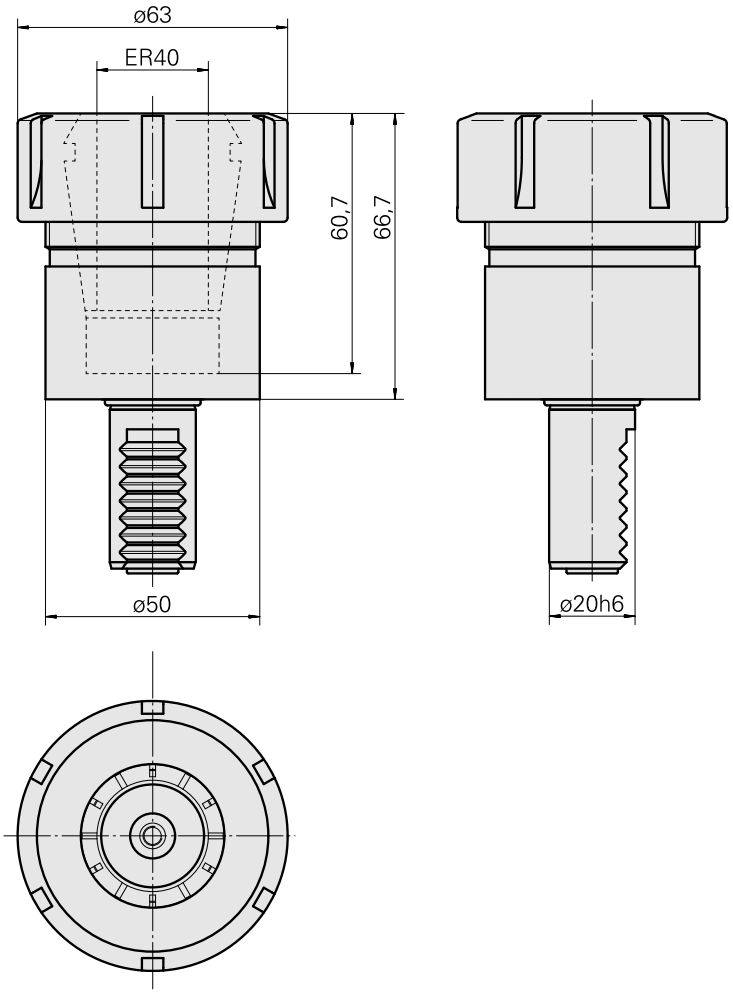

Documents

Product notes

DE (pdf)

FR (pdf)

EN (pdf)

Accessories

Required for operation

Spanner

Product ID : 10474438
Previous product ID : 490219.0401

TH accessories category	Mounting	Collet type	Clamping nut type
Tool	ER40	ER 40	Female thread

Tools for Collet chucks
Clamping nut wrench

Optional accessories

Tool holder accessories

Clamping nut

Product ID : 11029703
Previous product ID : 901939.0401

TH accessories category	Mounting	Collet type	Clamping nut type
Clamping nut	ER40	ER 40	Female thread

Other accessories

Clamping collet

Product ID : 10146045
Previous product ID : 901930.4---