Basic holder MS16 grooving slide, adjustable in Y direction

Technical data

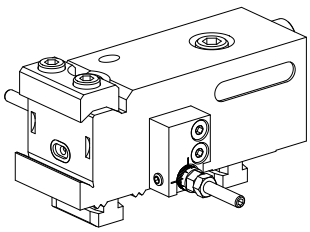

Slide system MS	MS16 grooving slide
Drive	not live
Fixation MS	W serration
X [mm]	17 (0.67")
Y [mm]	–
Z [mm]	–
INDEX TRAUB products	MS16-6 • MS16-6 Plus

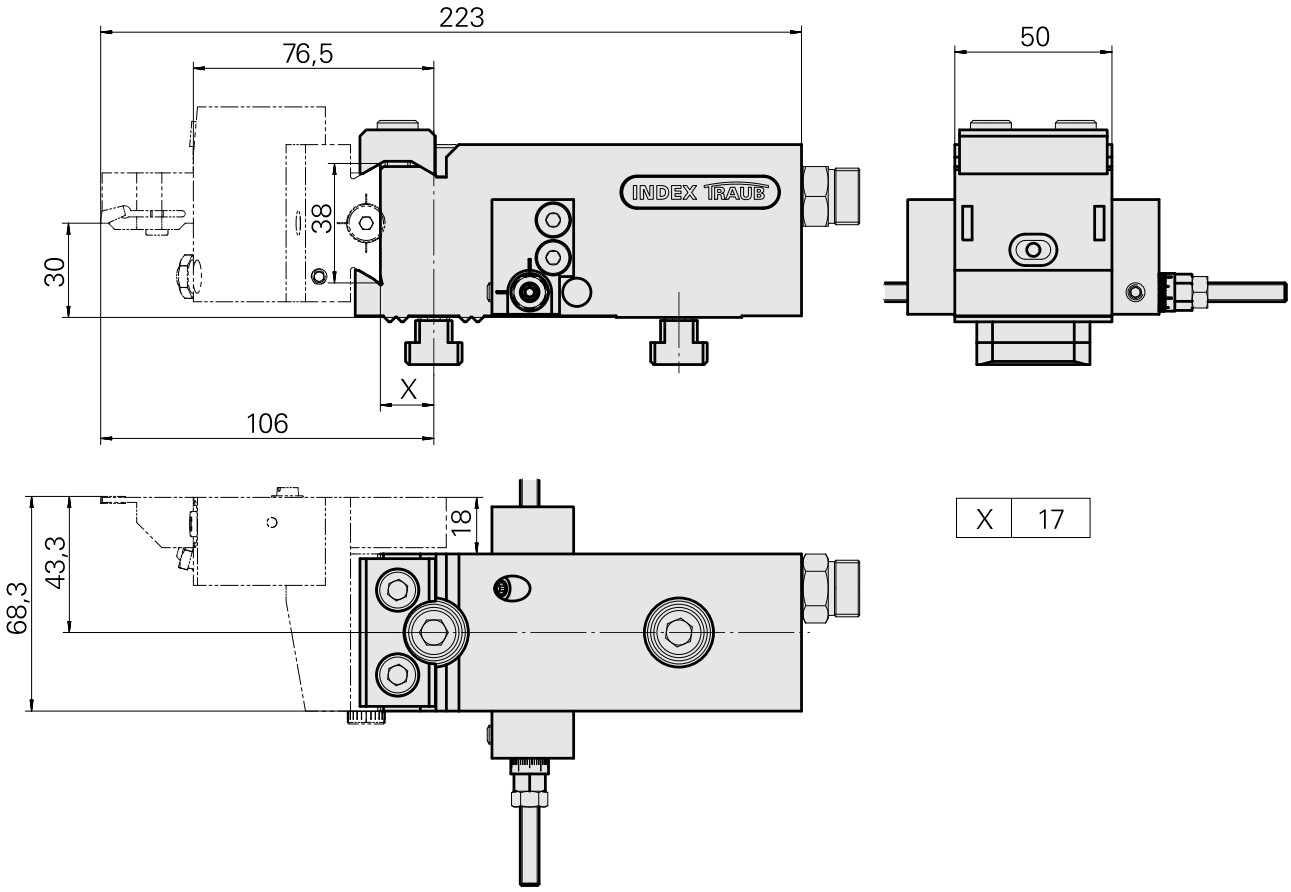

Documents

No downloads available for this product

Accessories

Optional accessories

MS tool holders

[Grooving tool holding block Square 16x16, adjustable in Y direction]

Product ID : 11005300
Previous product ID : W9991074

Drive	Cooling	Pressure	Direction
not live	external	80 bar	right-handed run
Mounting	**X [mm]**	**Y [mm]**	**Z [mm]**
Square 16x16	59.5 (2.34")	–	52 (2.05)

Other accessories

[EX.SOC.PLUG/4Z-908 VSTI R 1/4-ED]

Product ID : 10886676
Previous product ID : 410773.0025

[Stop Feineinstellung; groß]

Product ID : 10823911
Previous product ID : W9990754