WFB 32-20 Shrink-fit mounting D3

Technical data

TH accessories category	WFB 32-20
Mounting	Shrink-fit mounting D3
Quick change inserts	shrink-fit mounting

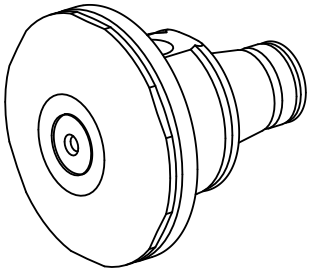

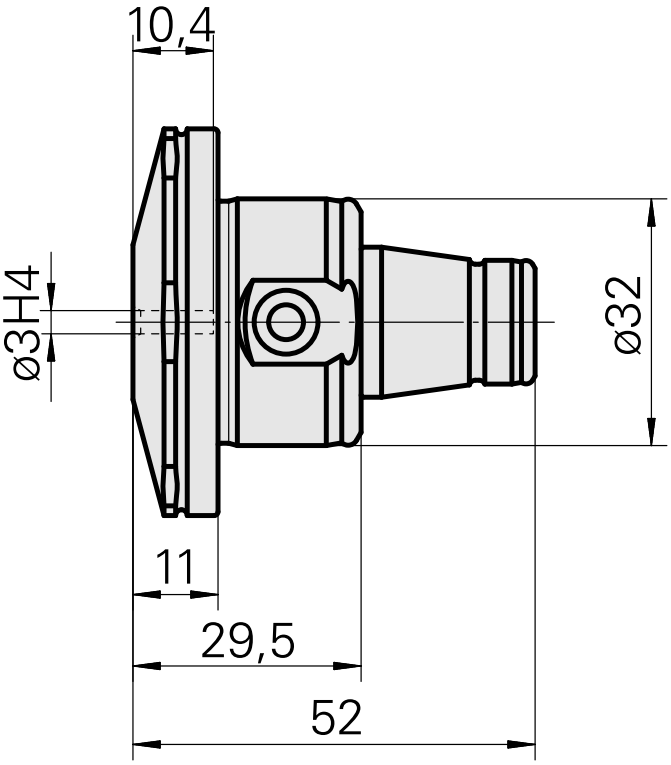

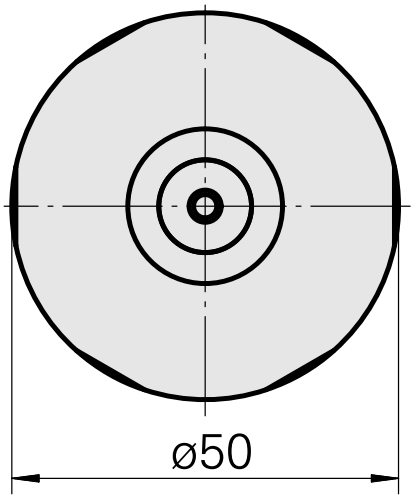

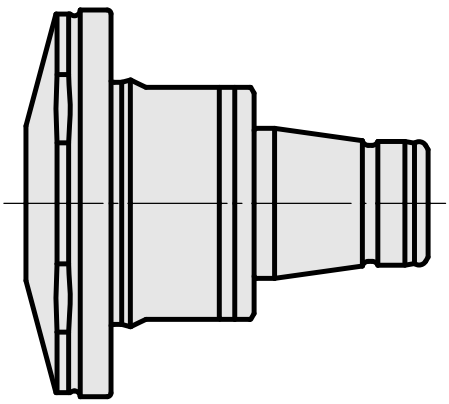

Documents

No downloads available for this product