INDEX

Drilling tool holder VDI 20 ER16

Technical data

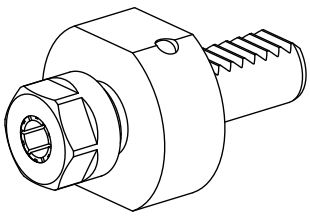

Shank VDI	VDI 20
Drive	not live
Fixation VDI	none
Cooling	internal
Pressure	20 bar
Mounting	ER16
reversable 180°	no
Data carrier	check tool station bore
X [mm]	42.5 (1.67")
Y [mm]	–
Z [mm]	–

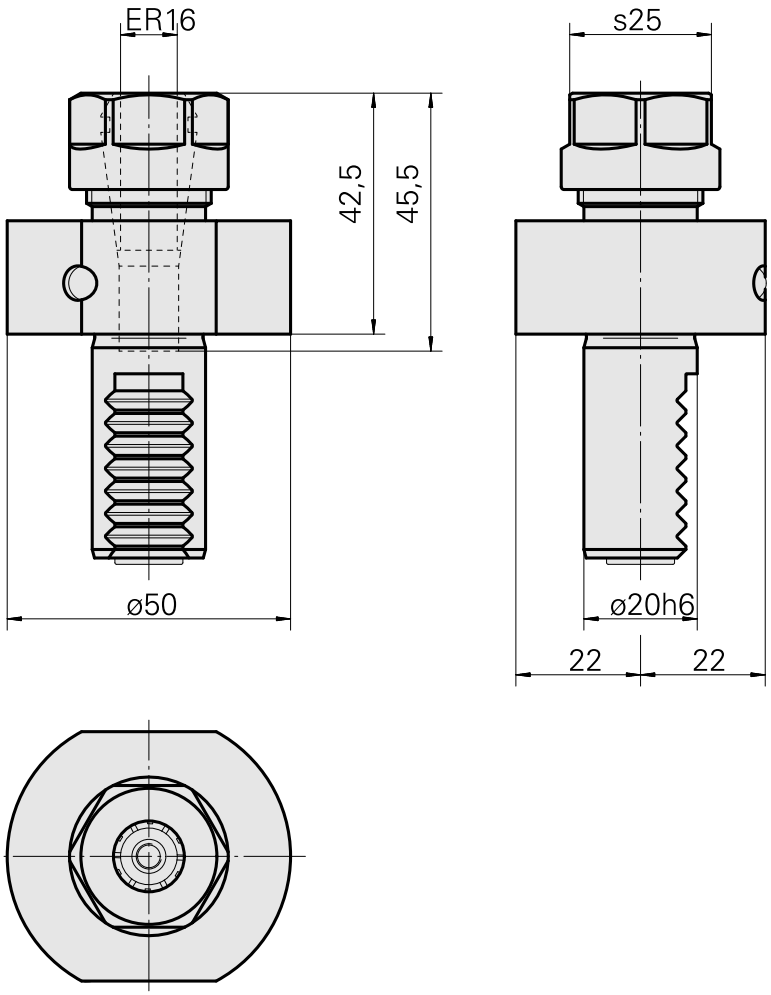

Documents

Product notes

DE (pdf)

EN (pdf)

FR (pdf)

Accessories

Required for operation

Spanner

Product ID : 10966369
Previous product ID : 490219.0161

TH accessories category	Mounting	Collet type	Clamping nut type
Tool	ER16	ER 16	Female thread

Tools for Collet chucks
Clamping nut wrench

Optional accessories

Tool holder accessories

Clamping nut

Product ID : 12061390
Previous product ID :

Clamping nut

Product ID : 10378189
Previous product ID : 901939.01

TH accessories category	Mounting	Collet type	Clamping nut type
Clamping nut	ER16	ER 16	Female thread

Other accessories

Clamping collet

Product ID : 10834596
Previous product ID : 901930.1---

Clamping collet

Product ID : 10589709
Previous product ID : W99903--

tapping tool collet ET-1-16

Product ID : 10542491
Previous product ID : 3230--

tapping tool collet

Product ID : 10865233
Previous product ID : WZ9990.9506F

Collet chuck

Product ID : 10870393
Previous product ID : W999065-

Clamping collet, sealed

Product ID : 10433061
Previous product ID : W999083-

Washer

Product ID : 12061397
Previous product ID :

Washer

Product ID : 12061398
Previous product ID :

INDEX

Spanner

Product ID : 12061854
Previous product ID :