Guide bush T223 Ø=13,00

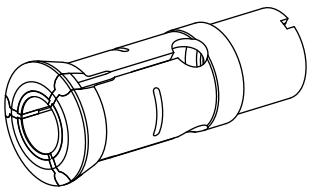

Technical data

Clamping device size	T223 deadlength
manufacturer product line	
Clamping type	with carbide insert
Nominal diameter (mm)	13 Millimeter
Clamping method	External clamping
Collet design	programmable (Axfix)
Collet version	Slots vulcanized (standard)
manufacturer product line	Schlenker

Note

with bushing

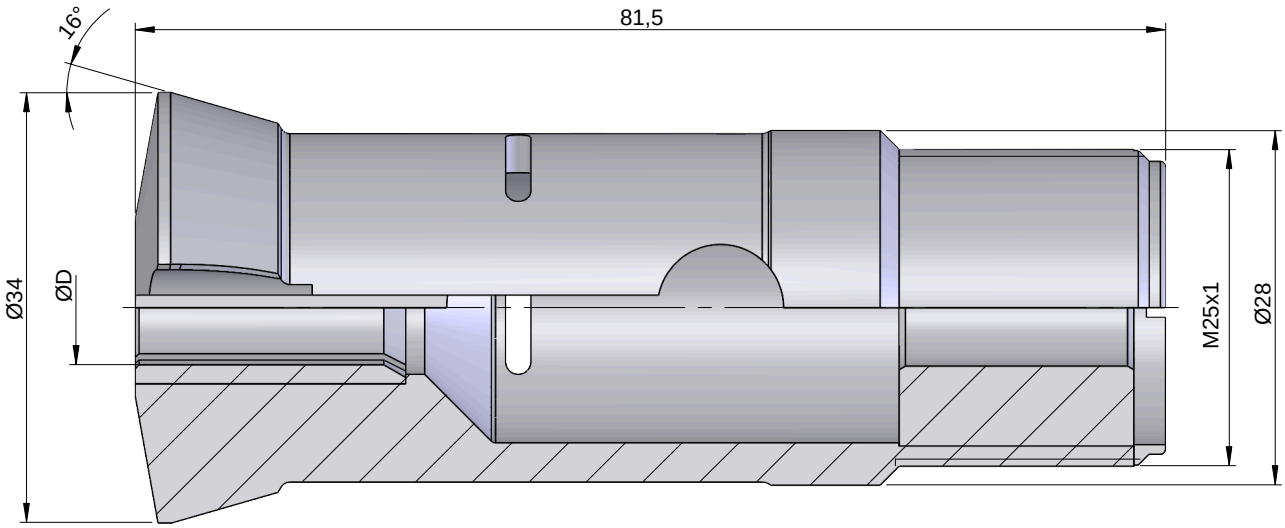
16°
81,5
Ø34
ØD
M25x1
Ø28

Documents

No downloads available for this product