INDEX

WFB 32-20 for VC.. 1103.., right, without gripper groove

Technical data

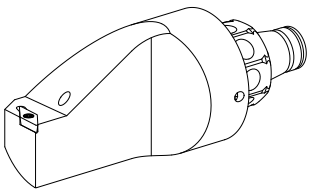

TH accessories category	WFB 32-20
Mounting	for VC.. 1103..
Quick change inserts	Turning tool holder

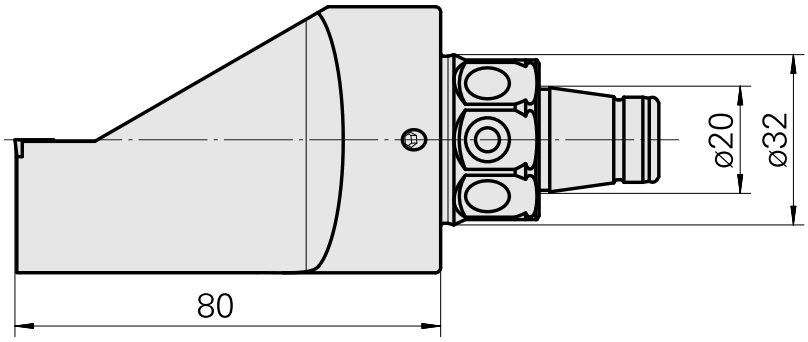

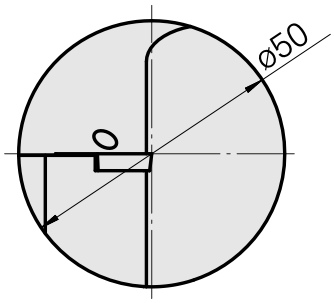

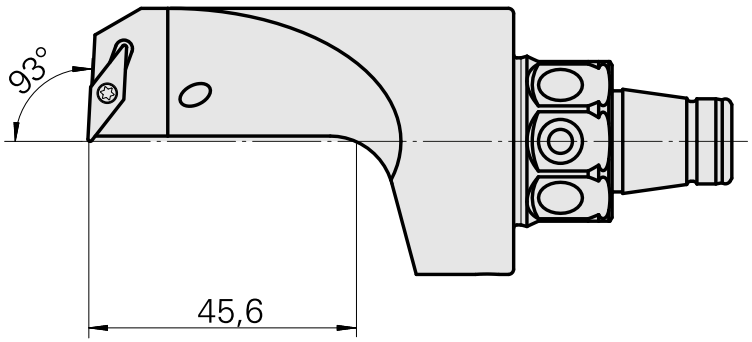

Documents

No downloads available for this product