Basic holder MS16 grooving slide

Technical data

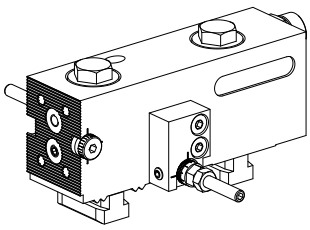

Slide system MS	MS16 grooving slide
Drive	not live
Fixation MS	W serration
X [mm]	–
Y [mm]	–
Z [mm]	–
INDEX TRAUB products	MS16-6 • MS16-6 Plus

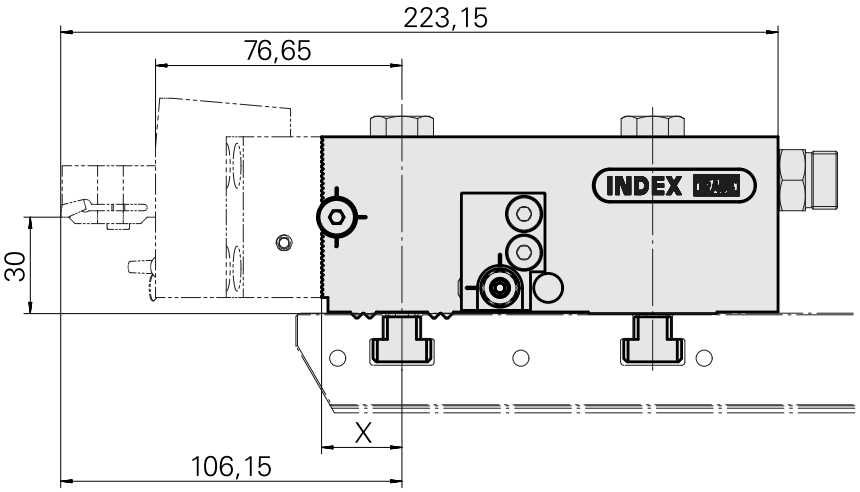

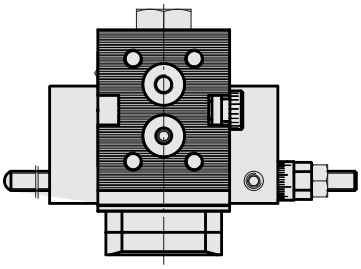

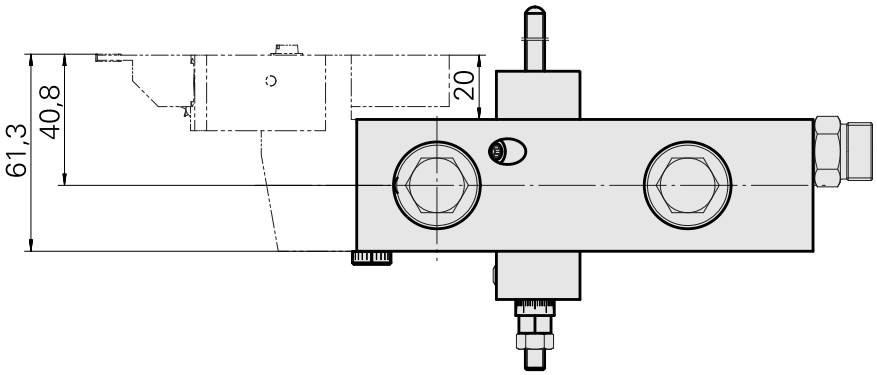

X	25

Documents

No downloads available for this product

Accessories

Optional accessories

MS tool holders

Mount D25

Product ID : 10318042
Previous product ID : W9991025

Drive	Cooling	Pressure	Mounting
not live	external	80 bar	D25
X [mm]	**Y [mm]**	**Z [mm]**	**INDEX TRAUB products**
112.6 (4.43")	–	–	MS16-6 • MS16-6 Plus

Grooving tool holding block Square 16x16, adjustable in Z direction

Product ID : 11075813
Previous product ID : W9990898

Drive	Cooling	Pressure	Direction
not live	external	80 bar	left-handed run
Mounting	**X [mm]**	**Y [mm]**	**Z [mm]**
Square 16x16	–	–	–
INDEX TRAUB products			
MS16-6 • MS16-6 Plus			

Grooving tool holding block Square 16x16, adjustable in Z direction

Product ID : 10598610
Previous product ID : W9990897

Drive	Cooling	Pressure	Direction
not live	external	80 bar	right-handed run
Mounting	**X [mm]**	**Y [mm]**	**Z [mm]**
Square 16x16	–	–	–
INDEX TRAUB products			
MS16-6 • MS16-6 Plus			

Other accessories

EX.SOC.PLUG/4Z-908 VSTI R 1/4-ED

Product ID : 10886676
Previous product ID : 410773.0025

Adjusting screw M6x0,25

Product ID : 10287476
Previous product ID : W00011.0012

Stop Feineinstellung; groß

Product ID : 10823911
Previous product ID : W9990754