Guide bush T229 Ø=30,00

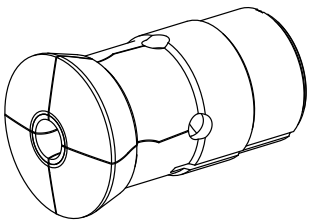

Technical data

Clamping device size	T229 deadlength
manufacturer product line	
Clamping type	with carbide insert
Nominal diameter (mm)	30 Millimeter
Clamping method	External clamping
Collet design	programmable (Axfix)
Collet version	S-slot
manufacturer product line	Schlenker

Note

with bushing

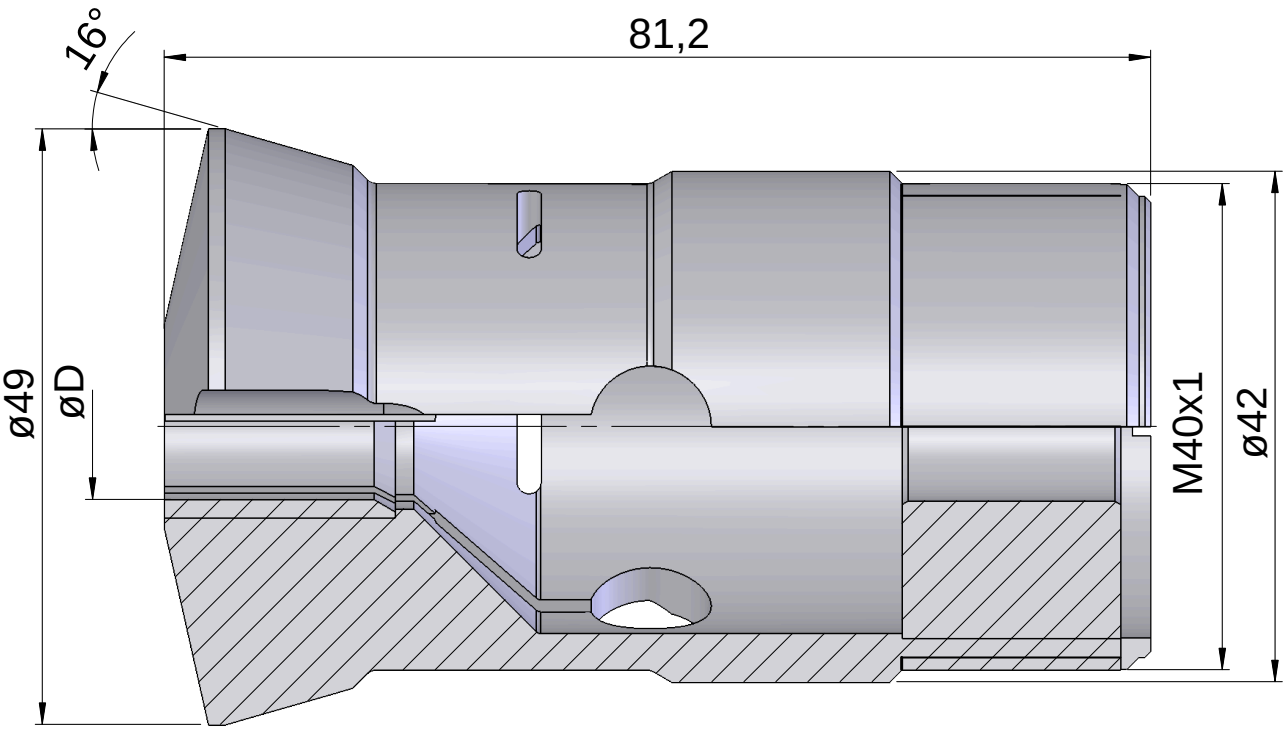
16°
81,2
ø49
øD
M40x1
ø42

Documents

No downloads available for this product