11065621
901939.3161

INDEX

Clamping nut, for internal cooling lubricant supply

Technical data

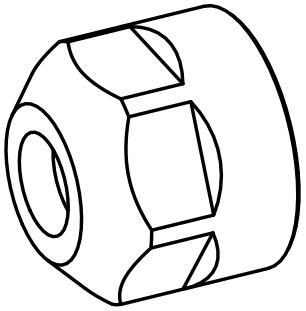

TH accessories category	Clamping nut
Mounting	ER16
Collet type	ER 16
Clamping nut type	Female thread

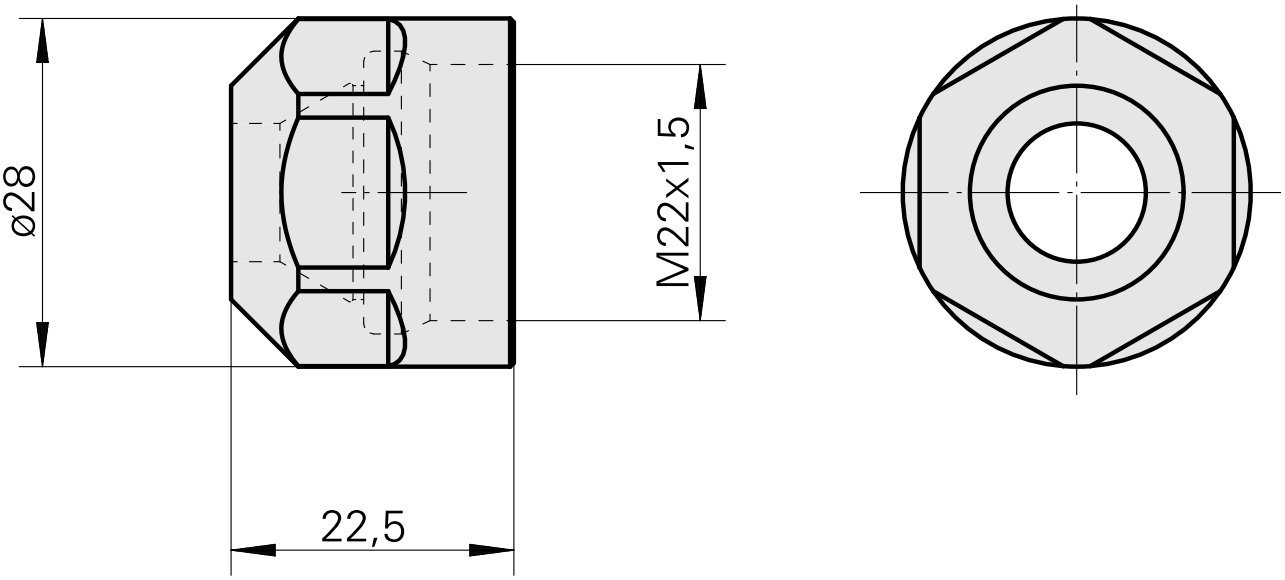

INDEX

Documents

No downloads available for this product