Drilling tool holder Shank 40 D20 (0.79, triple

Technical data

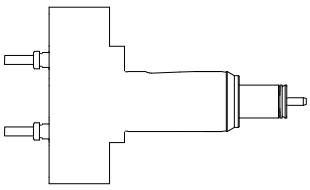

Shank TNL	Shank 40
Drive	not live
Cooling	external
Pressure	120 bar
Mounting	D20
INDEX TRAUB products	TNK36 • TNL26

Note

Can only be used on stations 2-4 of the back working unit with a Y axis!
Internal high-pressure coolant supply only available for the center mounting.

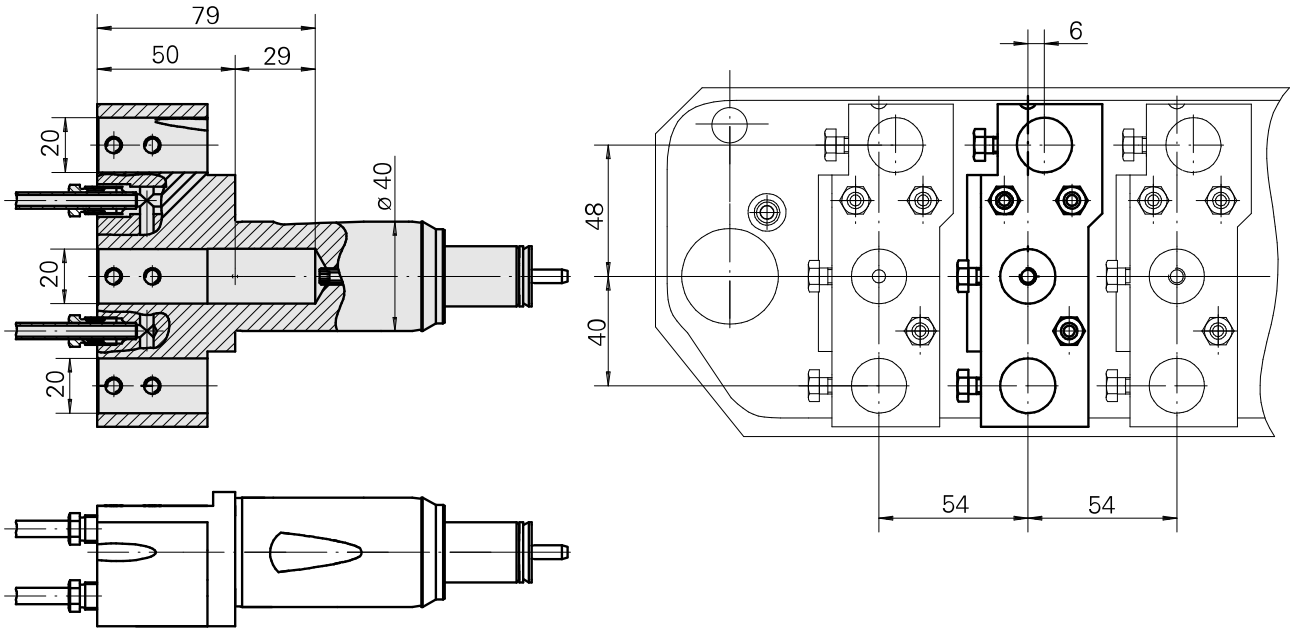
79
50
29
20
20
20
ø 40
6
48
40
54
54

Documents

No downloads available for this product

Accessories

Optional accessories

Other accessories

Mounting sleeve with collar D20

Product ID : 10063939
Previous product ID : W68510.04--