Adapter mounting aid WFB 32-20

Technical data

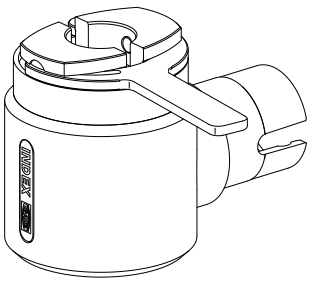

TH accessories category	Adapter mounting aid
Tool mounting	WFB 32-20

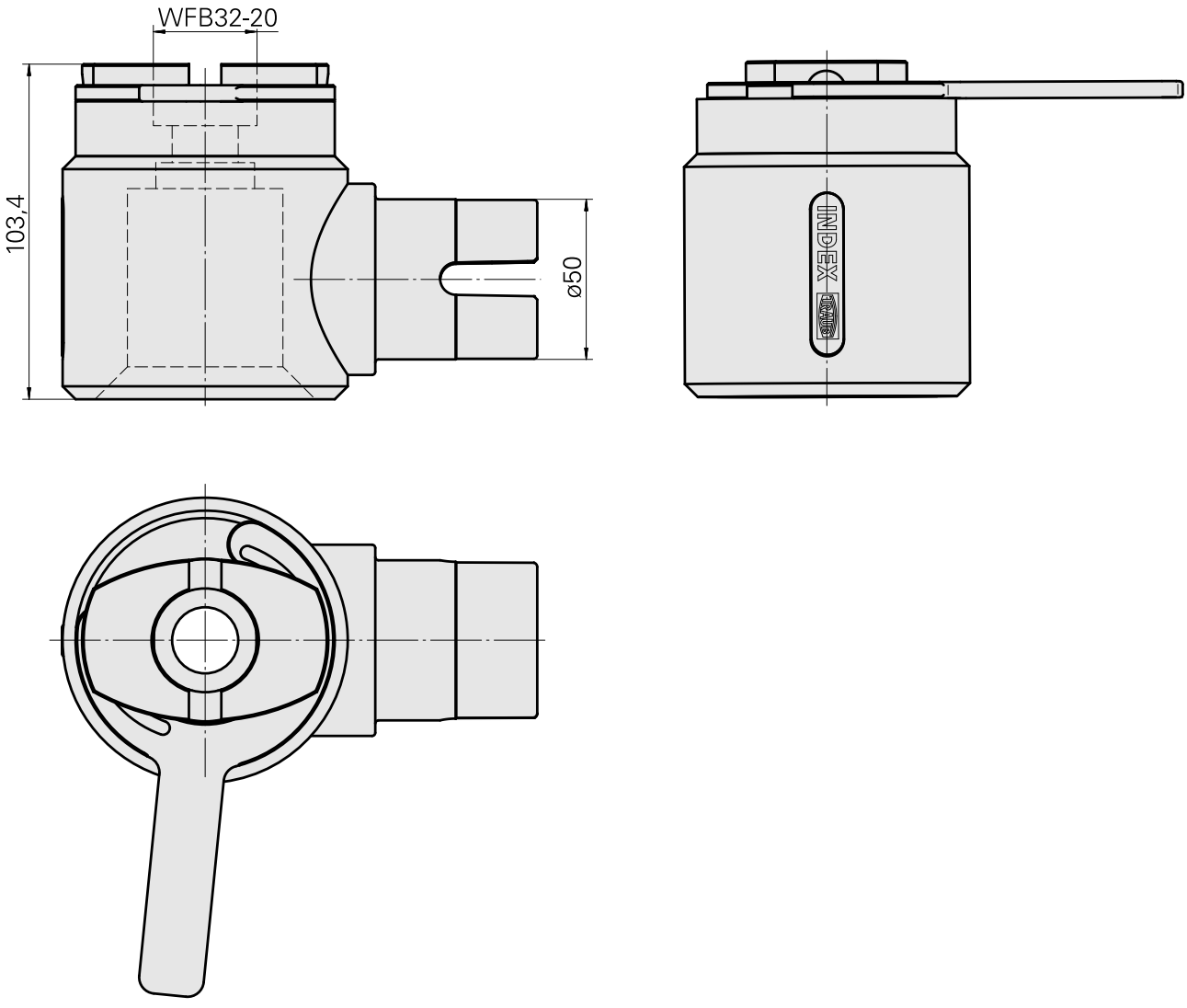

Documents

No downloads available for this product