Portapunte Gambo 40 D12

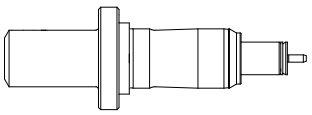

Technical data

Shank TNL	Shank 40
Drive	not live
Cooling	internal
Pressure	120 bar
Mounting	D12
INDEX TRAUB products	TNK36 • TNL26

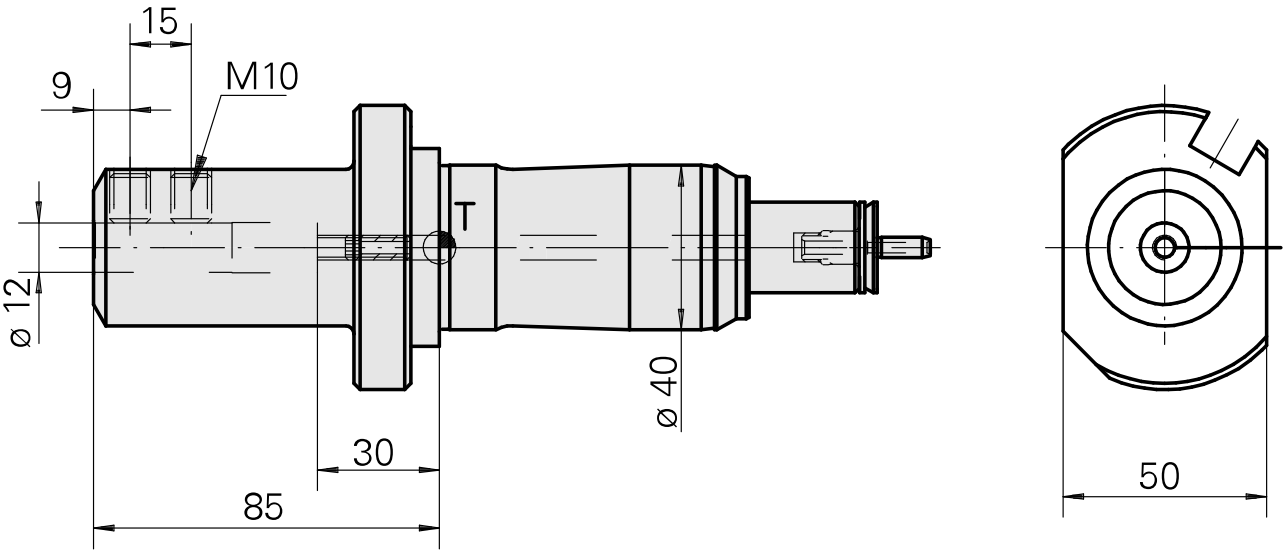

Documents

No downloads available for this product