INDEX

Drilling tool holder Shank 20 ER16

Technical data

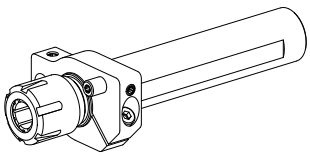

Shank TNL	Shank 20
Drive	not live
Fixation TNL	Pre-centering pin
Cooling	internal
Pressure	120 bar
Mounting	ER16
X [mm]	–
Y [mm]	–
Z [mm]	40.5 (1.59)
INDEX TRAUB products	TNL12

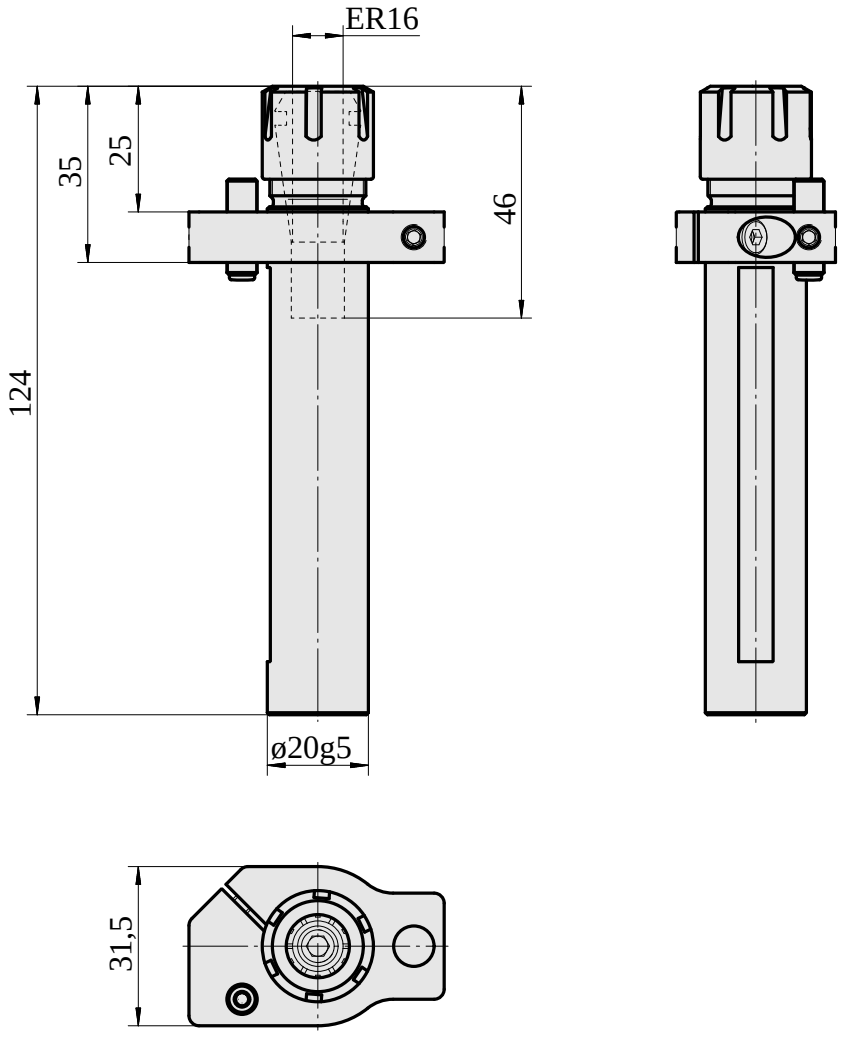

Documents

No downloads available for this product

Accessories

Required for operation

Spanner 7111.16000

Product ID : 10621809
Previous product ID : 490219.2161

TH accessories category	Mounting	Collet type	Clamping nut type
Tool	ER16	ER 16	Female thread diameter reduced
Tools for Collet chucks			
Clamping nut wrench			

Optional accessories

Tool holder accessories

Clamping nut

Product ID : 10178506
Previous product ID : 901939.6161

TH accessories category	Mounting	Collet type	Clamping nut type
Clamping nut	ER16	ER 16	Female thread diameter reduced

Other accessories

Clamping collet

Product ID : 10834596
Previous product ID : 901930.1---

Clamping collet

Product ID : 10589709
Previous product ID : W99903--

tapping tool collet ET-1-16

Product ID : 10542491
Previous product ID : 3230--

tapping tool collet

Product ID : 10865233
Previous product ID : WZ9990.9506F

Collet chuck

Product ID : 10870393
Previous product ID : W999065-

Clamping collet, sealed

Product ID : 10433061
Previous product ID : W999083-