Grooving tool holder MS16/MS22 Trapezoid

Technical data

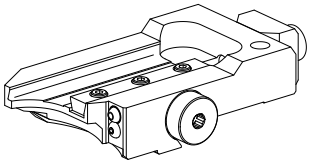

Slide system MS	MS16/MS22
Drive	not live
Fixation MS	Dovetail
Cooling	external
Pressure	20 bar
Direction	right-handed run
Mounting	Trapezoid 26x4
X [mm]	49.7 (1.96")
Y [mm]	–
Z [mm]	11.5 (0.45)
INDEX TRAUB products	A100 • MS16-6 • MS22-6 • MS22-8 • MS24-6 • MS24-8 • MS16-6 Plus

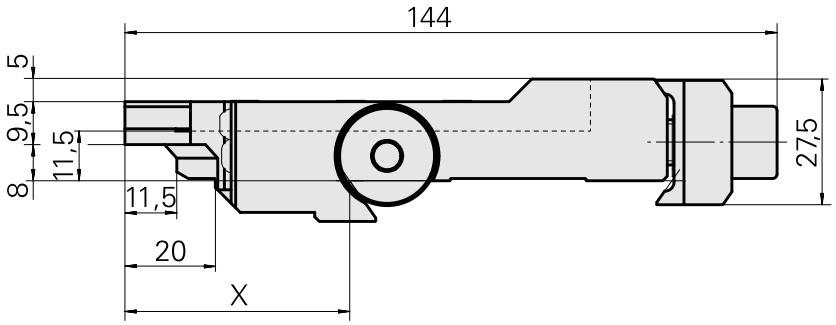

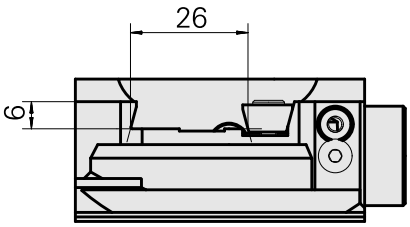

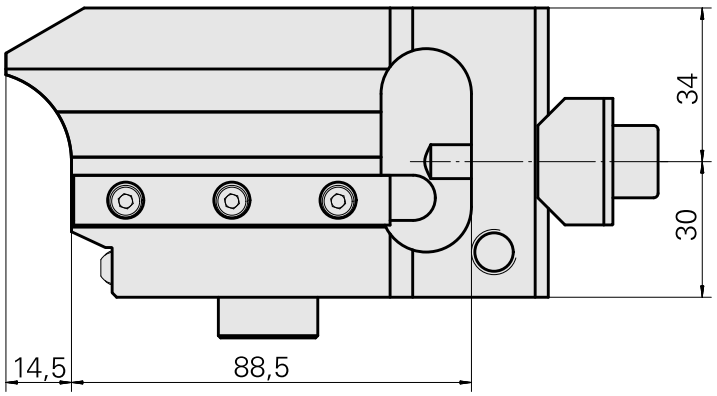

X	49,7

Documents

No downloads available for this product

Accessories

Optional accessories

Other accessories

[Screw Nacharb. an 410620.1030]

Product ID : 10855317
Previous product ID : W00013.0046

[Lens head screw]

Product ID : 10344546
Previous product ID : 410243.0406

[Ball nozzle 8D/M3,5]

Product ID : 10174644
Previous product ID : 474550.0071