INDEX

Clamping collet 1212E/F16 Ø=9,00

Technical data

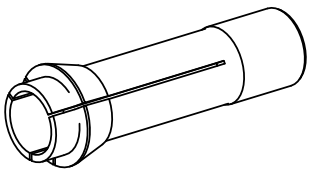

Clamping device size	1212E/F16
manufacturer product line	
Clamping type	smooth
Nominal diameter (mm)	9 Millimeter
Clamping method	External clamping
Collet version	Slots vulcanized (standard)
manufacturer product line	Schlenker

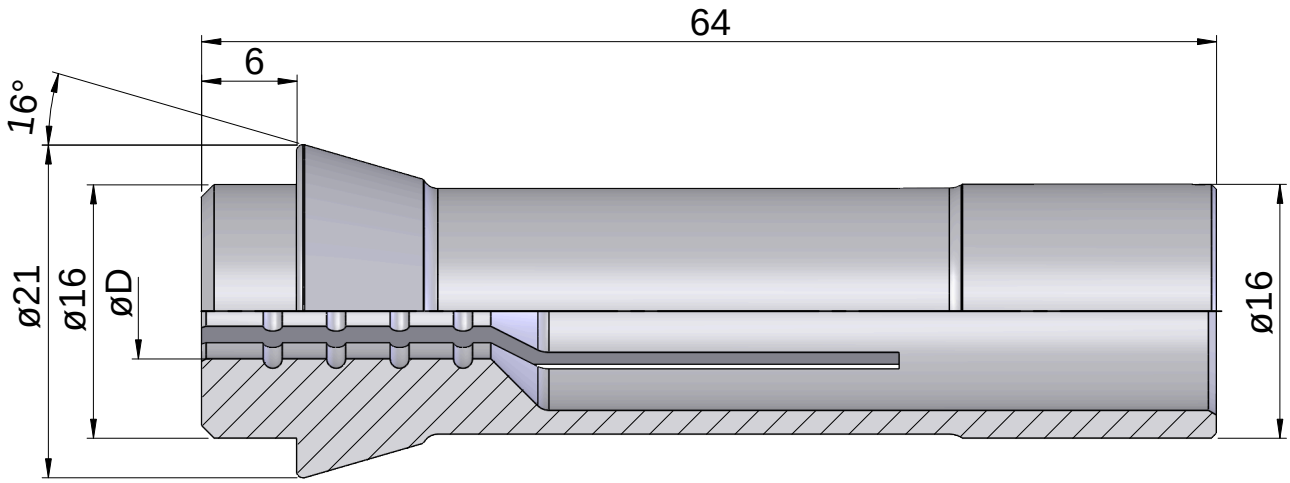

Documents

No downloads available for this product