INDEX

Drilling unit Circular prism 1:3 ER8, double

Technical data

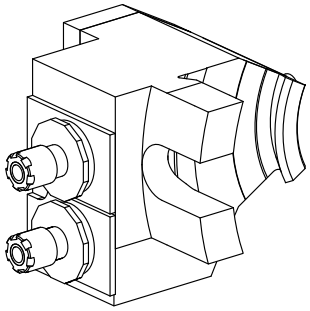

Shank TNL	Circular prism
Drive	Spur gear TRAUB TNL12
Fixation TNL	Central tensioning screw
Speed ratio	1:3
Mounting	ER8
reversable 180°	no
Direction	same as drive direction
X [mm]	45 (1.77")
Y [mm]	27 (1.06)
Z [mm]	4 (0.16)
INDEX TRAUB products	TNL12

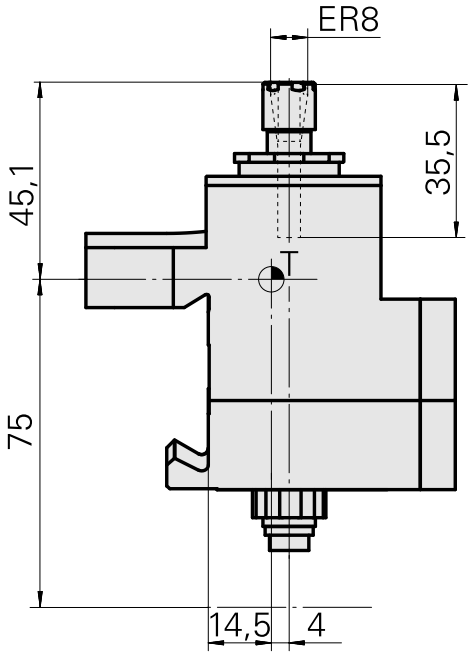

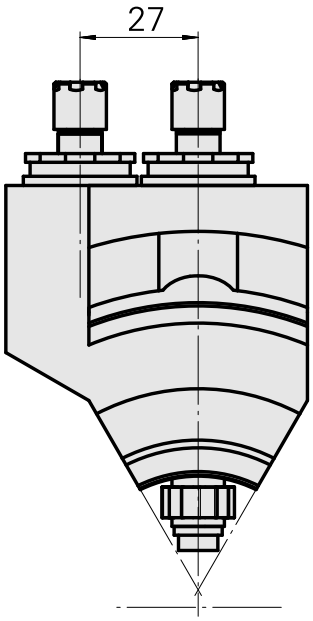

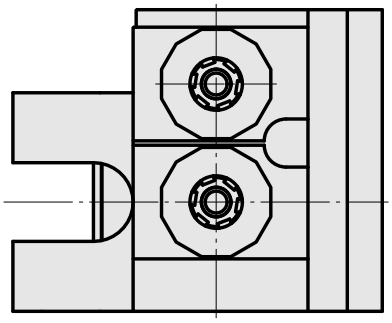

Documents

No downloads available for this product

Accessories

Required for operation

Spanner

Product ID : 11077222
Previous product ID : 323118

TH accessories category	Mounting	Collet type	Clamping nut type
Tool	ER8	ER 8	Female thread diameter reduced
Tools for Collet chucks Clamping nut wrench			

Spanner Doppelhalter

Product ID : 10748242
Previous product ID : 987792

Optional accessories

Tool holder accessories

Clamping nut

Product ID : 10490215
Previous product ID : 323117

TH accessories category	Mounting	Collet type	Clamping nut type
Clamping nut	ER8	ER 8	Female thread diameter reduced

Other accessories

Clamping collet

Product ID : 10719579
Previous product ID : 901930.8---