Housing

Technical data

TH accessories category	Cutting tools
Mounting	Löcher System

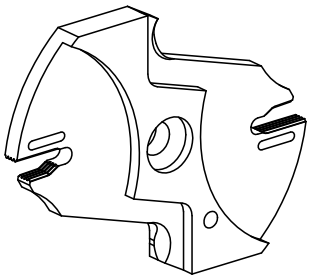

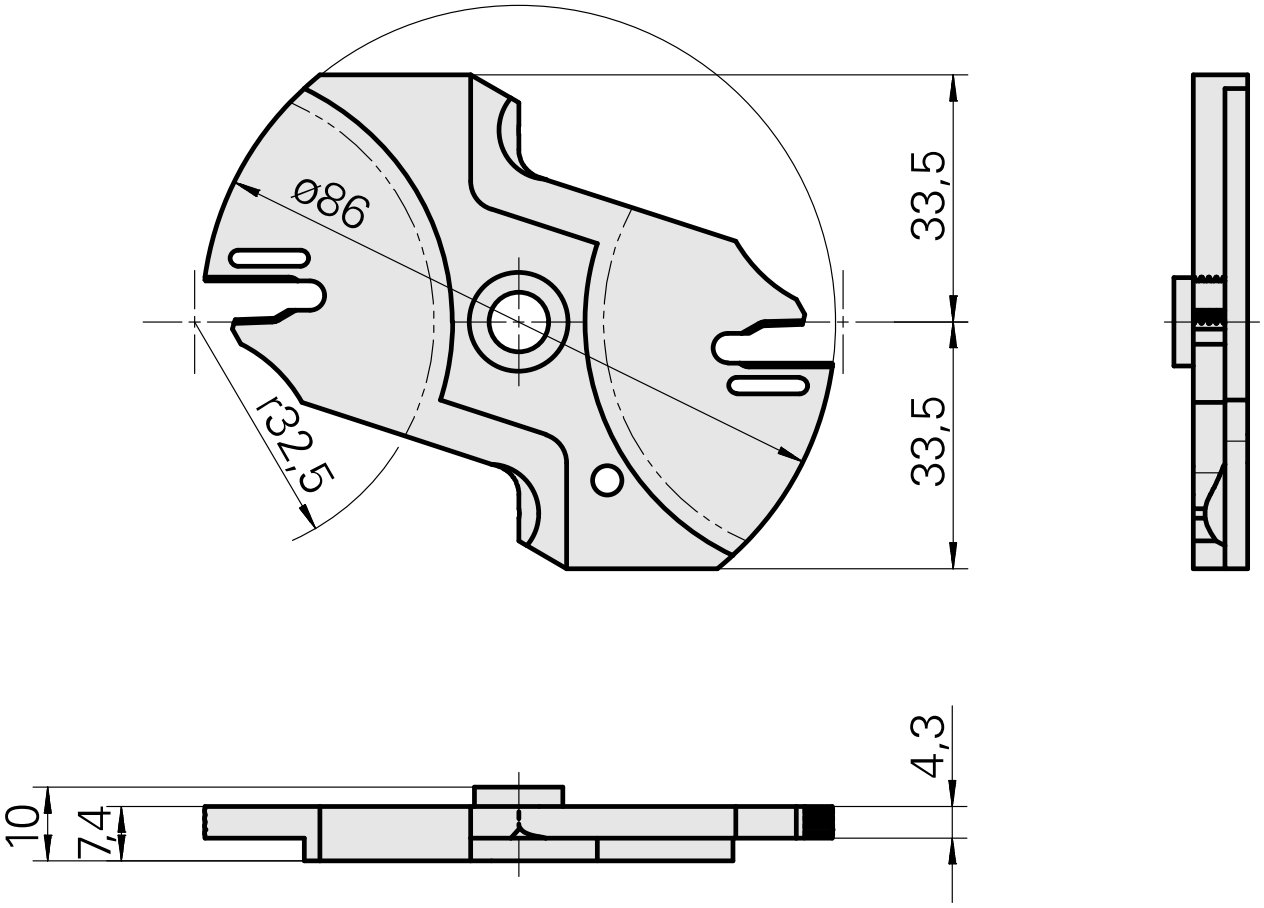

Documents

No downloads available for this product

Accessories

Optional accessories

Tool holder accessories

Assembly device

Product ID : 12038458
Previous product ID :

TH accessories category	Mounting
Cutting tools	Löcher System

Housing

Product ID : 12035623
Previous product ID :

TH accessories category	Mounting
Cutting tools	Löcher System

Housing

Product ID : 12035624
Previous product ID :

TH accessories category	Mounting
Cutting tools	Löcher System