Probe holder KPS 45 Blum

Technical data

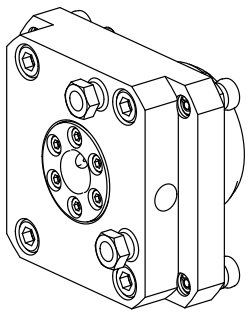

Shank KPS	KPS 45
Drive	not live
Cooling	external
Mounting	Blum
Pressure	80 bar
reversable 180°	yes
X [mm]	30 (1.18")
Y [mm]	–
Z [mm]	–
INDEX TRAUB products	TNL20 • TNL32 • TNL32-11 • TNL32-11 compact • TNL20-11 • TNL32 compact • TNK40.2-10 • TNL20.2 • TNK40.2

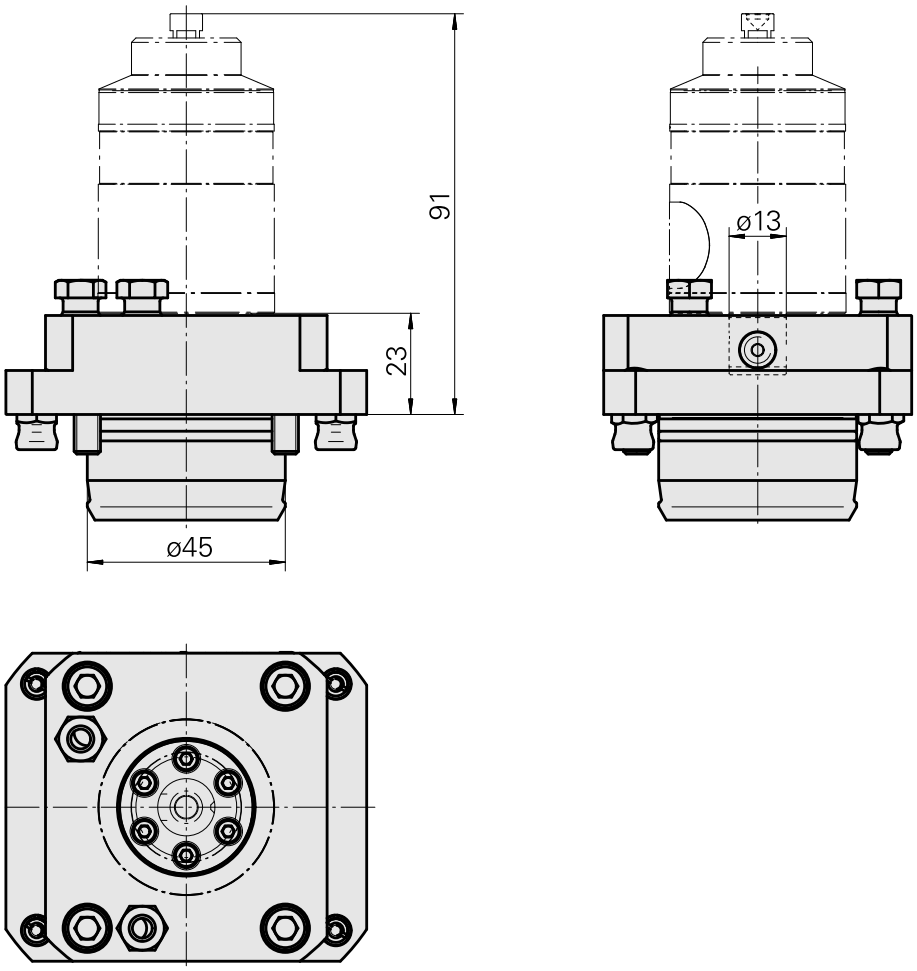

Documents

No downloads available for this product

Accessories

Required for operation

Not defined

Product ID : 12133362
Previous product ID :

Not defined

Product ID : 12133363
Previous product ID :

Optional accessories

Tool holder accessories

Coolant tube, L=100 mm (3.93")

Product ID : 10309869
Previous product ID : W9990658

TH accessories category	Mounting
Cooling lubricant tube	D6

Other accessories

Not defined

Product ID : 12006155
Previous product ID :

Not defined

Product ID : 12006154
Previous product ID :

Chip Protection

Product ID : 12007557
Previous product ID :

Conical ring DIN 3862-6-St

Product ID : 10528470
Previous product ID : 471060.0601

THREADED BUSHING M10x1 Stahl verzinkt A3C

Product ID : 10707394
Previous product ID : 471112.06