AC-Motor 9,5Nm6000 600V

Technical data

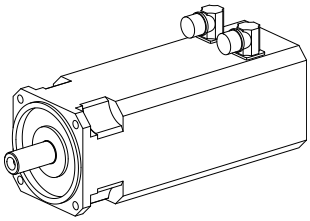

manufacturer product line	Siemens
Electrical assemblies	Servomotor
manufacturer product line	1FT6
Length	303 Millimeter
Width	116 Millimeter
Height	148 Millimeter
Voltage	600 Volt
Voltage type	AC~
(Nominal) speed (rpm)	6000 1/minute
(Stall) torque [Nm]	9.5 Newton/meter
Plug connection/type	M23 (size 1 / encoder)
Protection class	IP67
Encoder type	Increment
Brake	no – unbraked
Motor design	IM B5

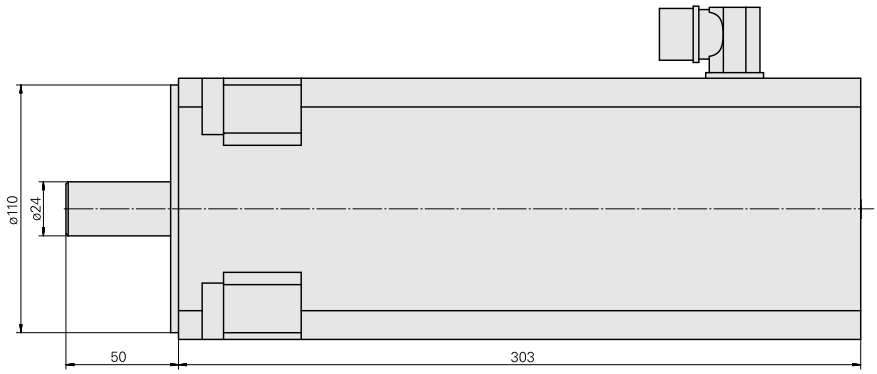

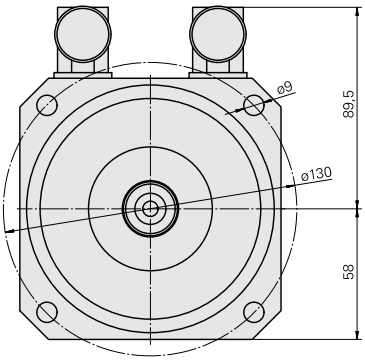

Documents

Product notes

EN (pdf)

FR (pdf)

DE (pdf)