# Guide bush T229 Ø=14,00

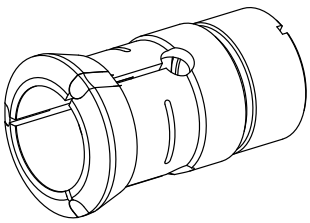

## Technical data

| | |
|---|---|
| **Clamping device size** | T229 deadlength |
| **manufacturer product line** | |
| **Clamping type** | with carbide insert |
| **Nominal diameter (mm)** | 14 Millimeter |
| **Clamping method** | External clamping |
| **Collet design** | programmable (Axfix) |
| **Collet version** | Slots vulcanized (standard) |
| **manufacturer product line** | Schlenker |

## Note

with bushing

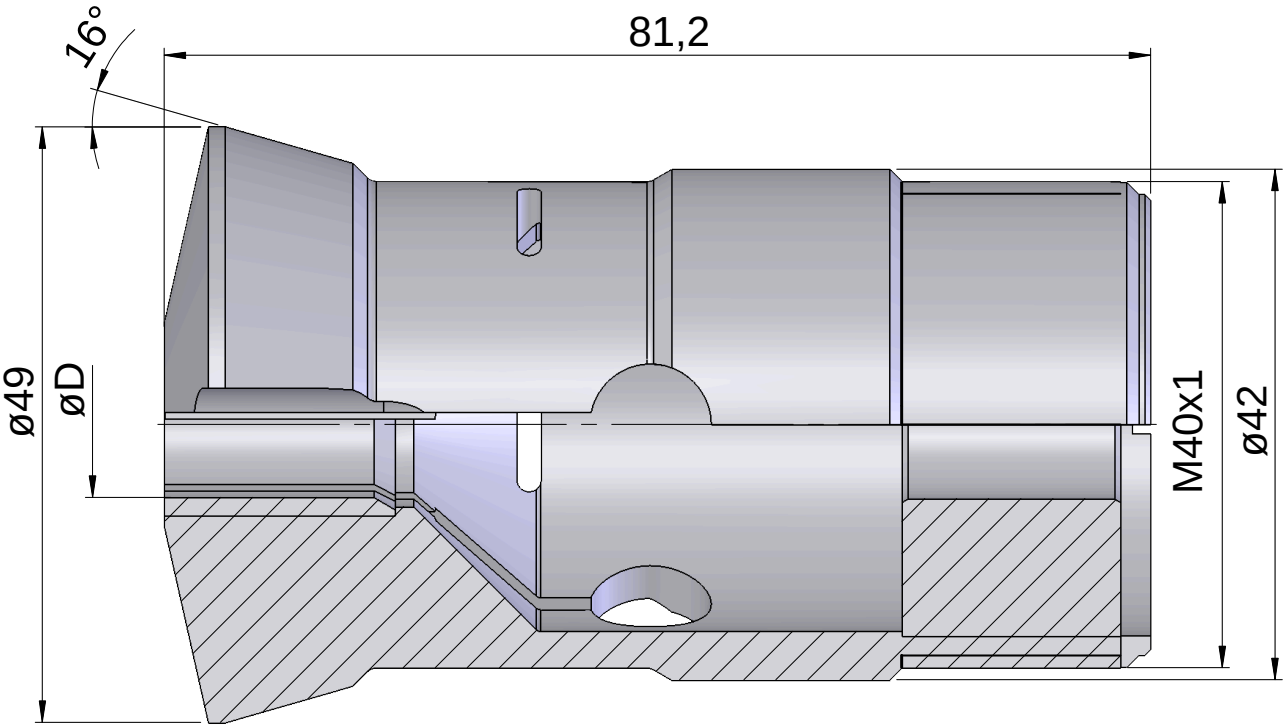
16°
81,2
ø49
øD
M40x1
ø42

## Documents

No downloads available for this product