Cassette

Technical data

TH accessories category	Cassette, right
Mounting	for DC.. 11T3..

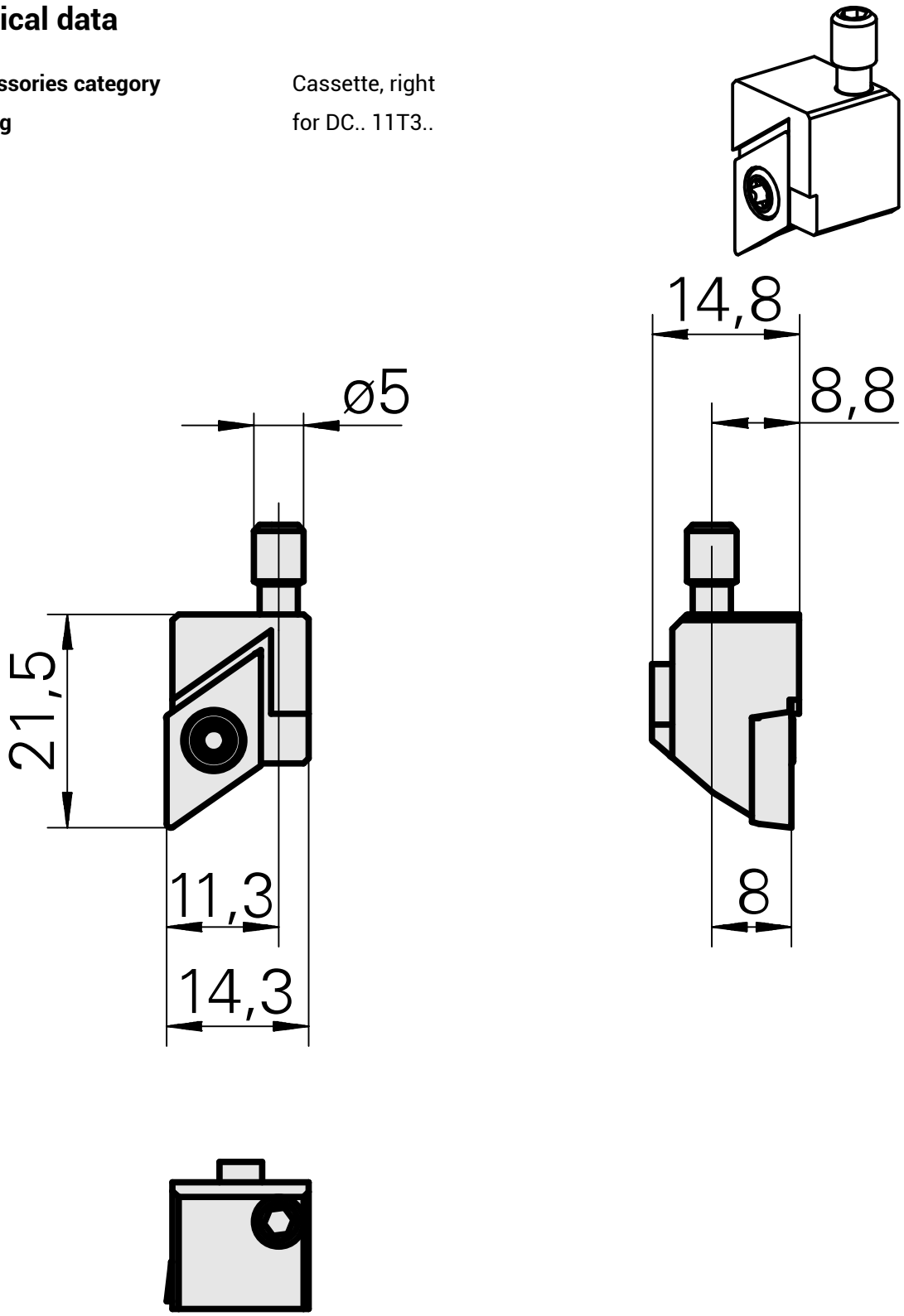

Documents

No downloads available for this product