INDEX

Grooving tool holding block Square 16x16, adjustable in Y direction

Technical data

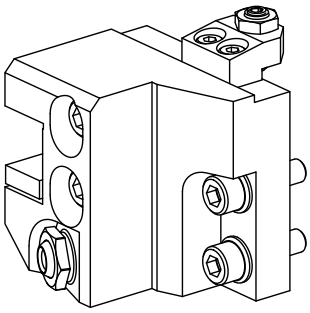

Drive	not live
Cooling	external
Pressure	80 bar
Direction	right-handed run
Mounting	Square 16x16
X [mm]	46 (1.81")
Y [mm]	–
Z [mm]	22 (0.87)
INDEX TRAUB products	MS16-6 • MS16-6 Plus

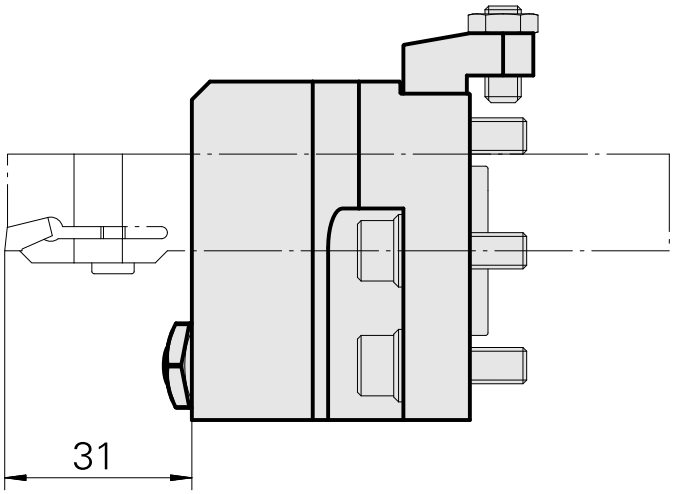

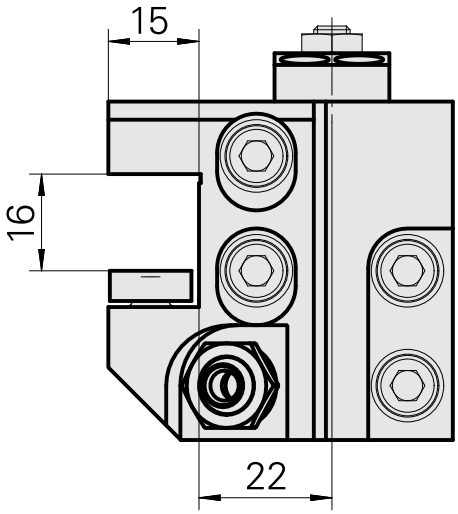

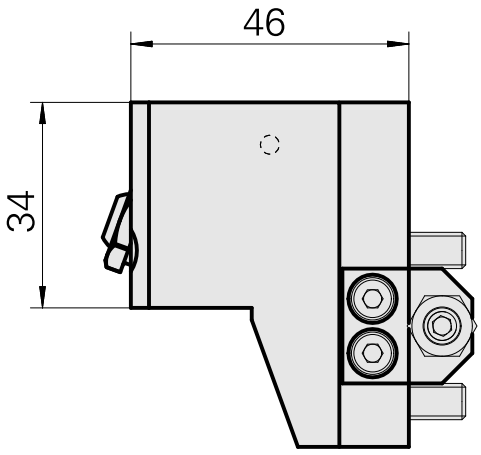

Documents

No downloads available for this product

Accessories

Optional accessories

Other accessories

Coolant Nozzle

Product ID : 11031912
Previous product ID : W67500.3208

Nozzle M6 mit D1,6

Product ID : 10147428
Previous product ID : W00019.0216

HOLLOW SCREW M14x1 M14x1

Product ID : 10105238
Previous product ID : W67530.0818

BUSHING 10 D x 6 D x 12,5

Product ID : 10670360
Previous product ID : W67530.0824