INDEX CAPTO C3 ER16

Technical data

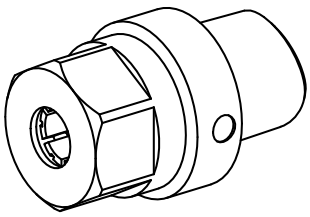

TH accessories category	INDEX CAPTO C3
Mounting	ER16
Quick change inserts	collet mounting

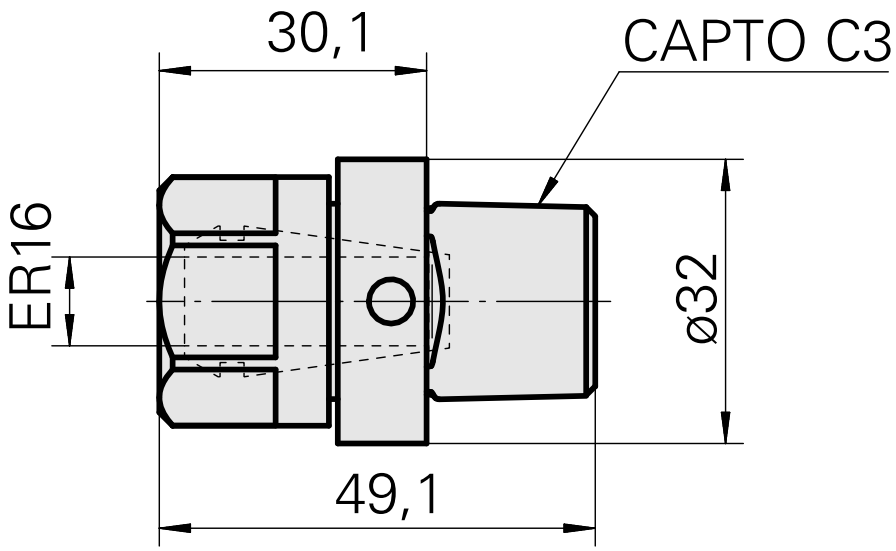

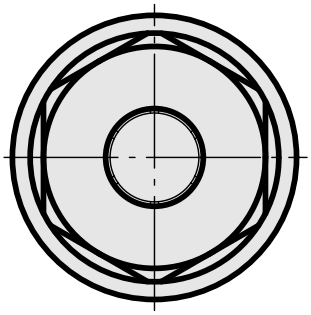

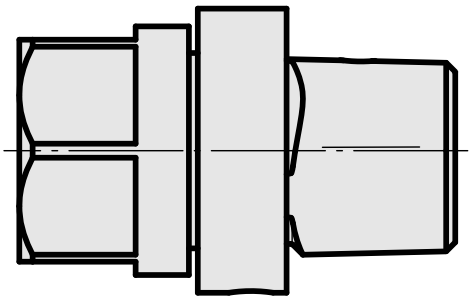

Documents

No downloads available for this product

Accessories

Required for operation

Spanner

Product ID : 10966369
Previous product ID : 490219.0161

TH accessories category	Mounting	Collet type	Clamping nut type
Tool	ER16	ER 16	Female thread

Tools for Collet chucks
Clamping nut wrench

Optional accessories

Tool holder accessories

Clamping nut

Product ID : 10378189
Previous product ID : 901939.01

TH accessories category	Mounting	Collet type	Clamping nut type
Clamping nut	ER16	ER 16	Female thread

Other accessories

Clamping collet

Product ID : 10834596
Previous product ID : 901930.1---

Clamping collet

Product ID : 10589709
Previous product ID : W99903--

tapping tool collet ET-1-16

Product ID : 10542491
Previous product ID : 3230--

tapping tool collet

Product ID : 10865233
Previous product ID : WZ9990.9506F

Collet chuck

Product ID : 10870393
Previous product ID : W999065-

Clamping collet, sealed

Product ID : 10433061
Previous product ID : W999083-