Turning tool holder KPS 45 square 16x16

Technical data

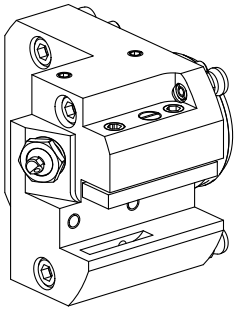

Shank KPS	KPS 45
Drive	not live
Cooling	external and internal
Mounting	Square 16x16
Pressure	80 bar
X [mm]	57 (2.24")
Y [mm]	–
Z [mm]	45.5 (1.79)
INDEX TRAUB products	TNL32 • TNL32-11

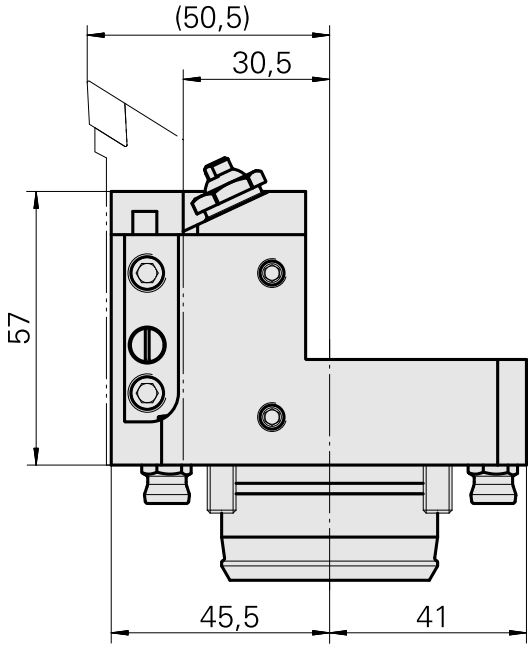

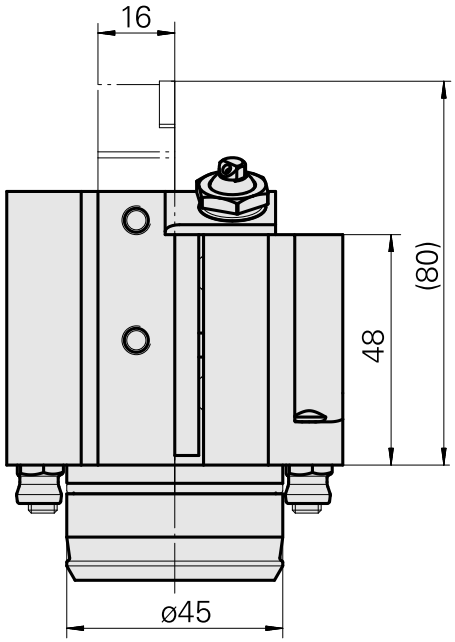

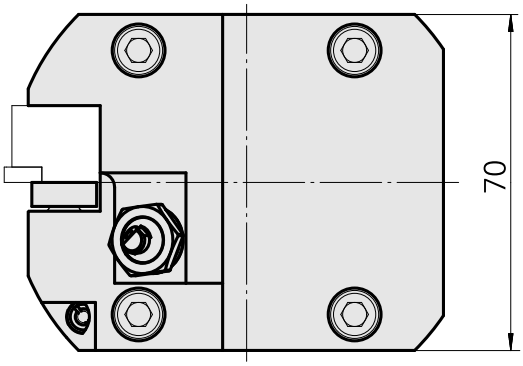

Documents

No downloads available for this product

Accessories

Optional accessories

Other accessories

BUSHING 10 D x 6 D x 12,5

Product ID : 10670360
Previous product ID : W67530.0824

HOLLOW SCREW M14x1 M14x1

Product ID : 10105238
Previous product ID : W67530.0818

Nozzle Kugel D10 - Bohrung D2 40°

Product ID : 10072335
Previous product ID : 910693