Kühlmittelzuführung ERM25 IK

Technical data

There are currently no additional technical features stored for this product

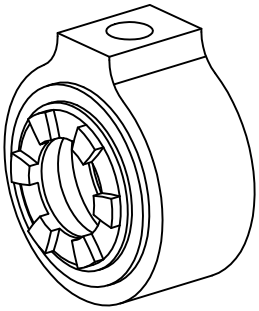

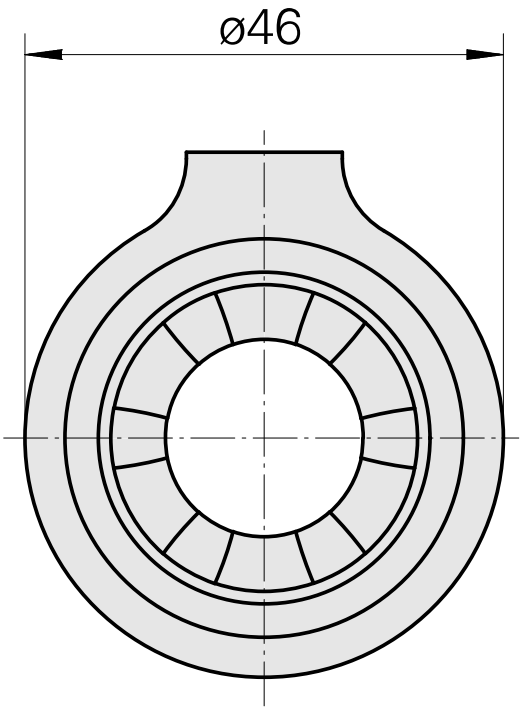

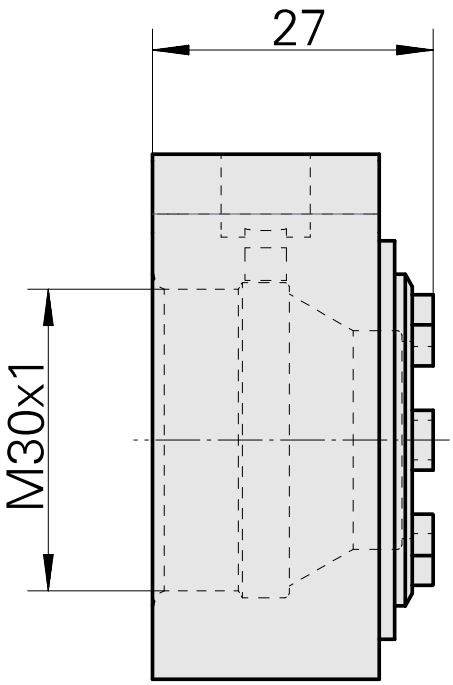

Documents

No downloads available for this product