# WFB 32-20 Shrink-fit mounting D3

## Technical data

| | |
|---|---|
| **TH accessories category** | WFB 32-20 |
| **Mounting** | Shrink-fit mounting D3 |
| **Quick change inserts** | shrink-fit mounting |

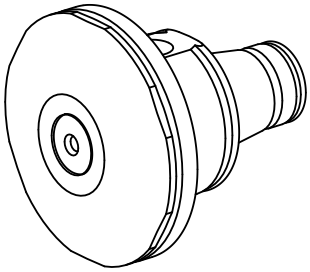

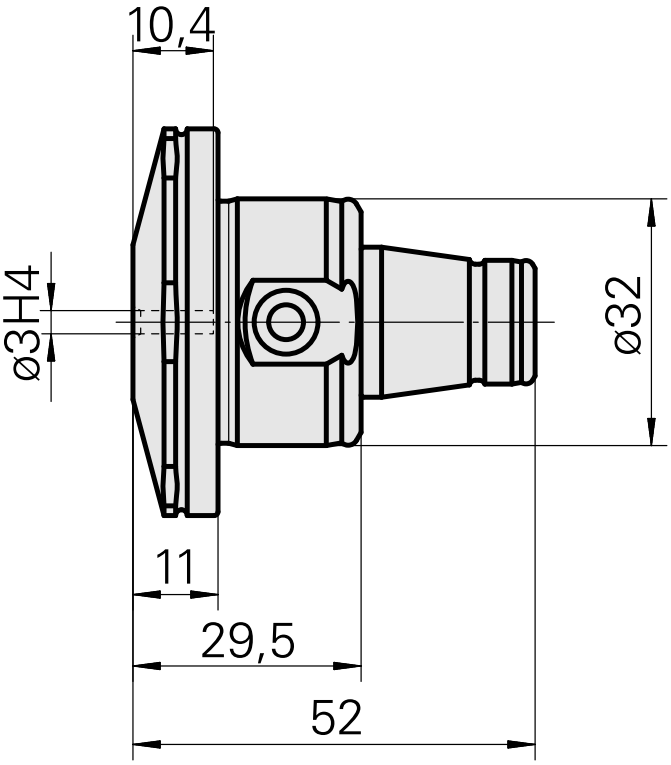


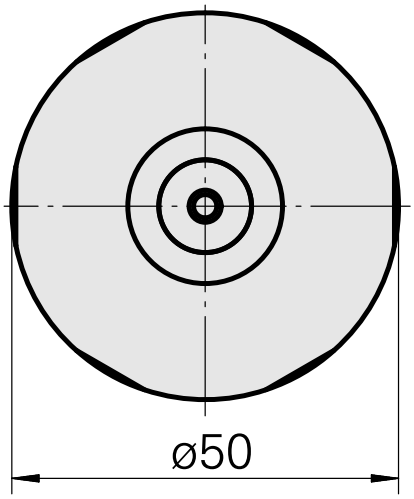


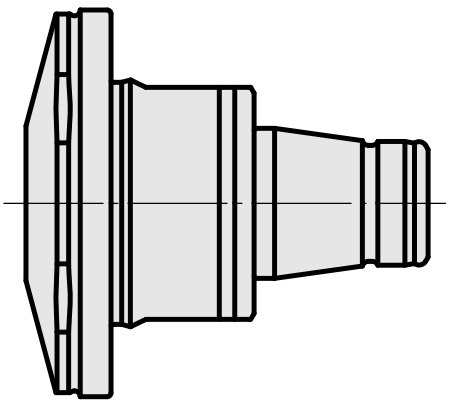

## Documents

No downloads available for this product