INDEX

Circular saw unit Shank 40 8:1

Technical data

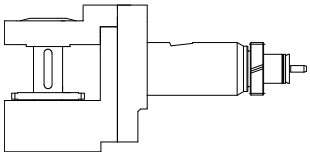

Shank TNL	Shank 40
Drive	TRAUB TNK/TNL toothed wheel
Speed ratio	8:1
Cooling	external
Pressure	30 bar
INDEX TRAUB products	TNK36 • TNL26

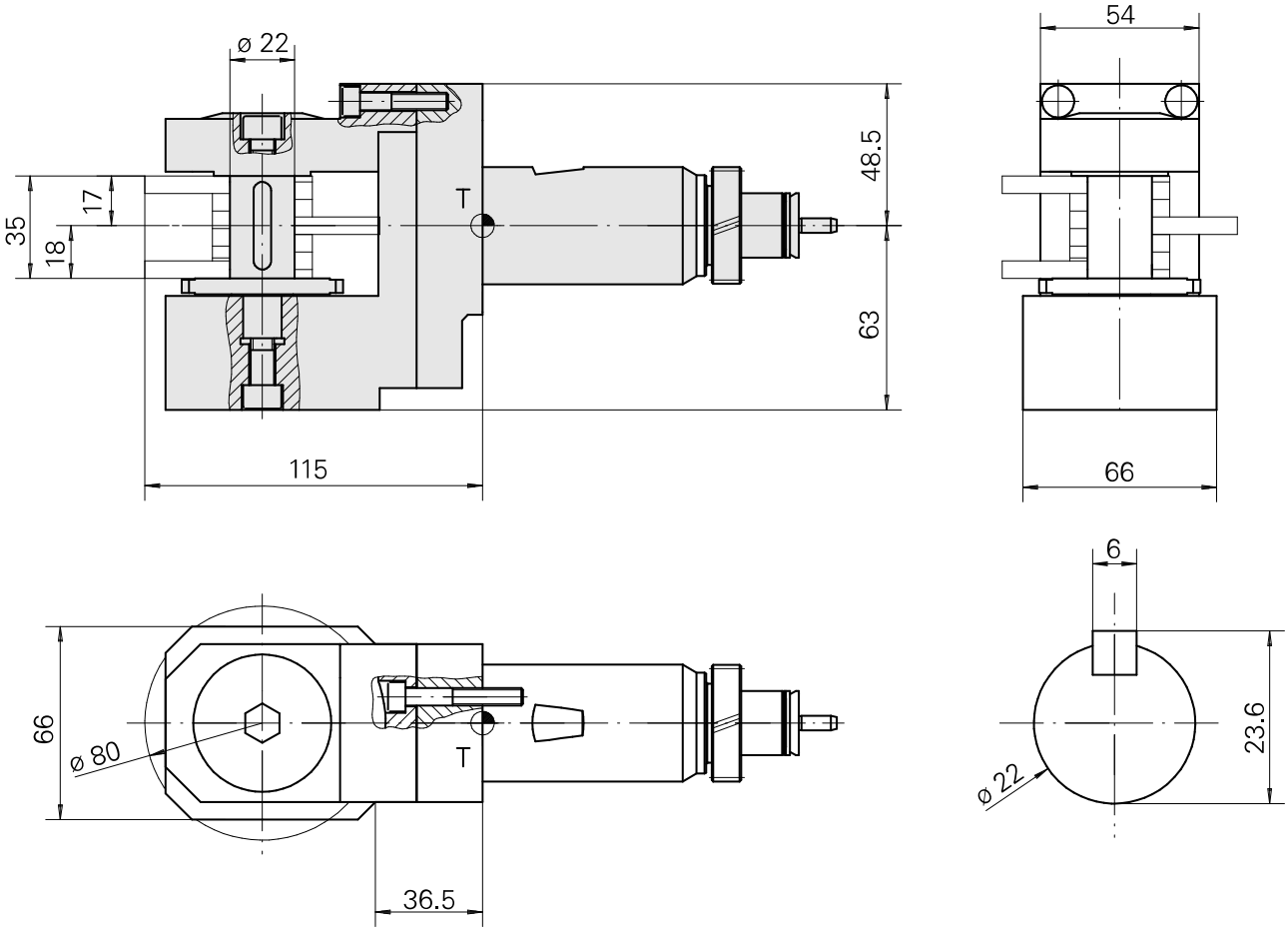

Documents

No downloads available for this product

Accessories

Optional accessories

Other accessories

Mandrel

Product ID : 10598369
Previous product ID : 981146

Mandrel

Product ID : 11043713
Previous product ID : 981145

Mandrel

Product ID : 10252202
Previous product ID : 981144

Mandrel

Product ID : 10827167
Previous product ID : 984640

Mandrel

Product ID : 10455988
Previous product ID : 983710