INDEX

Presetting device D80/WFB32-20

Technical data

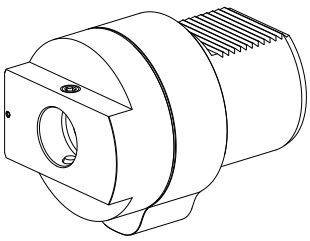

TH accessories category	Adapter for presetting units
Mounting	D80 for presetting devices
Tool mounting	WFB 32-20

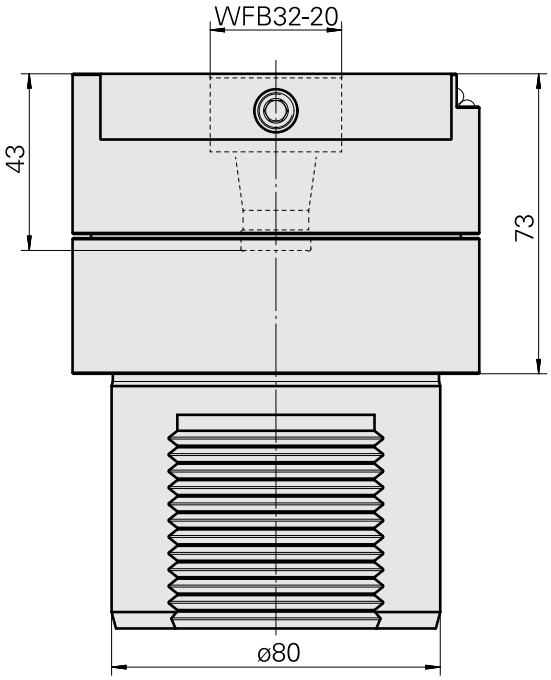

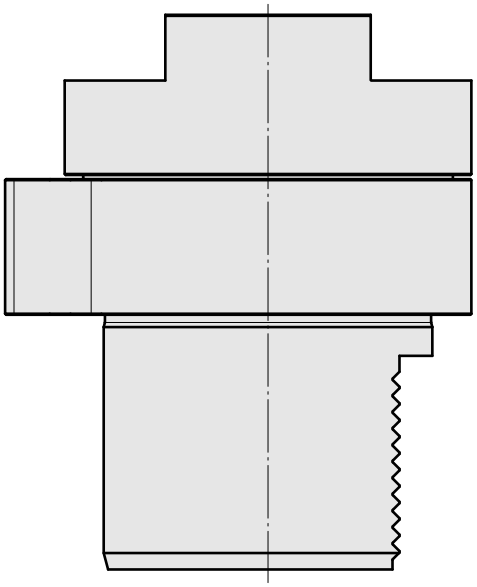

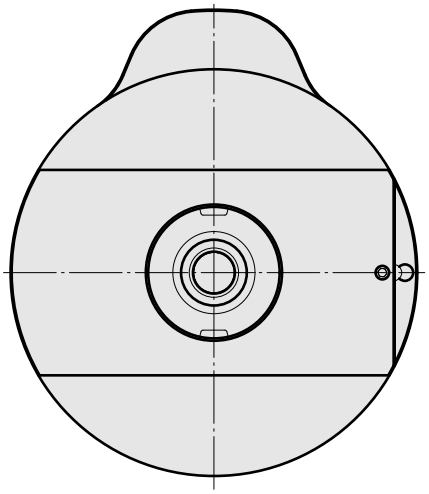

Documents

No downloads available for this product