INDEX

Clamping head

Technical data

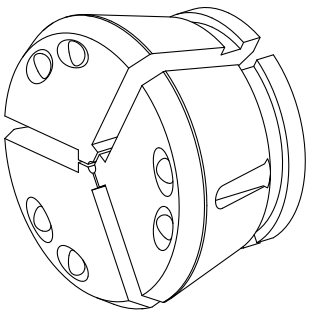

Clamping device size	SK80
manufacturer product line	SPANNTOP nova chuck • SPANNTOP mini chuck
Clamping type	smooth
Nominal diameter (mm)	55 Millimeter
Clamping method	External clamping
manufacturer product line	Hainbuch

No 3-side view is currently available for this product

Documents

No downloads available for this product