Clamping collet 1212E/F16 Ø=10,00

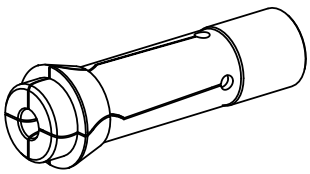

Technical data

Clamping device size	1212E/F16
manufacturer product line	
Clamping type	smooth
Nominal diameter (mm)	10 Millimeter
Clamping method	External clamping
Collet version	S-slot
manufacturer product line	Schlenker

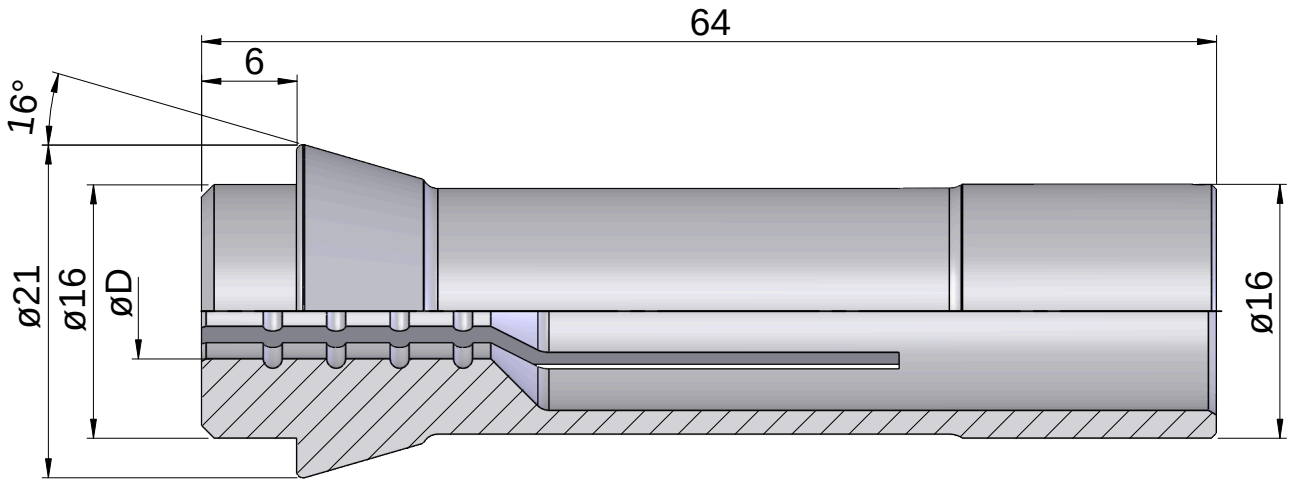

Documents

No downloads available for this product