11074855
251390.2710

INDEX

Anel, largura 0,1 mm

Technical data

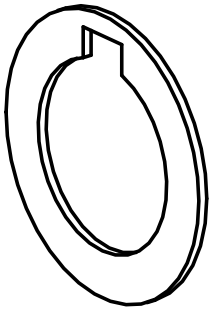

TH accessories category	Mill arbor ring
Mounting	Milling shaft D27

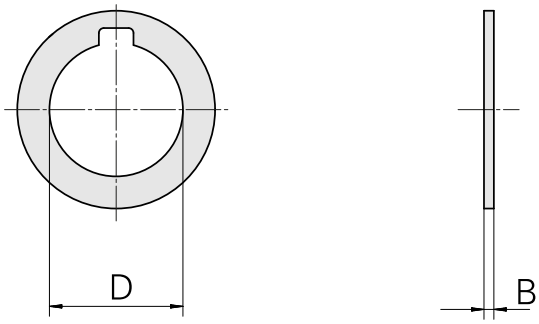

INDEX

Documents

No downloads available for this product