10496401
981824.G040UP

INDEX

Clamping collet 145E/F25 Ø=4,00

Technical data

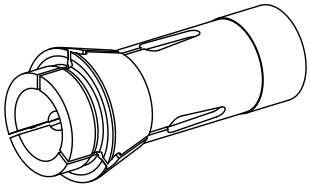

Clamping device size	145E/F25
manufacturer product line	
Clamping type	smooth
Nominal diameter (mm)	4 Millimeter
Clamping method	External clamping
Collet version	Slots vulcanized (standard)
manufacturer product line	Schlenker

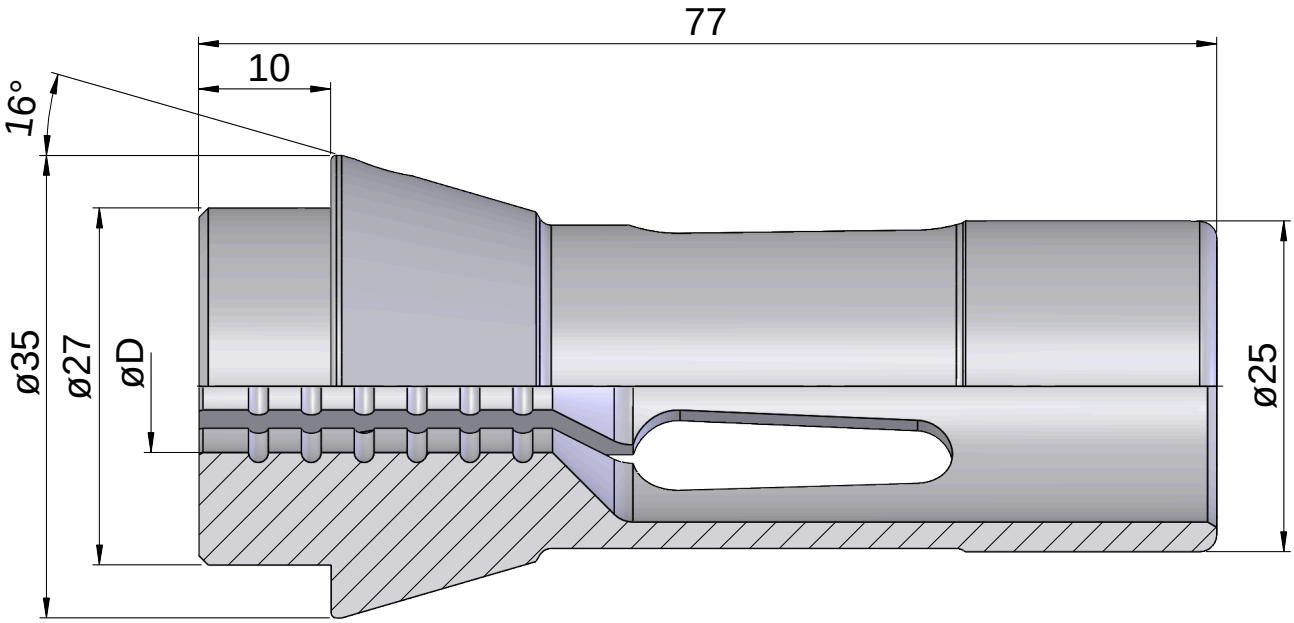

Documents

No downloads available for this product