10479992
900465.3100

INDEX

# Cabecote de sujeicao SK65 D=31,00mm

## Technical data

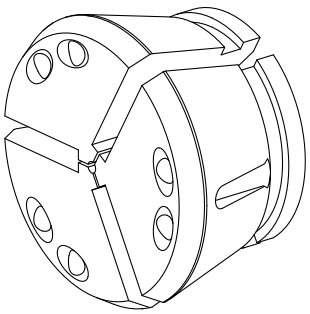

| | |
|---|---|
| **Clamping device size** | SK65 |
| **manufacturer product line** | SPANNTOP nova chuck |
| **Clamping type** | grooved |
| **Nominal diameter (mm)** | 31 Millimeter |
| **Clamping method** | External clamping |
| **manufacturer product line** | Hainbuch |

No 3-side view is currently available for this product

## Documents

No downloads available for this product