INDEX

Clamping collet 1212E/F16 Ø=12,00

Technical data

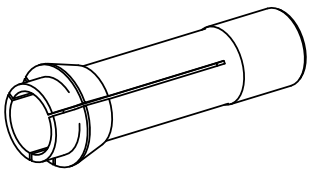

Clamping device size	1212E/F16
manufacturer product line	
Clamping type	grooved
Nominal diameter (mm)	12 Millimeter
Clamping method	External clamping
Collet version	Slots vulcanized (standard)
manufacturer product line	Schlenker

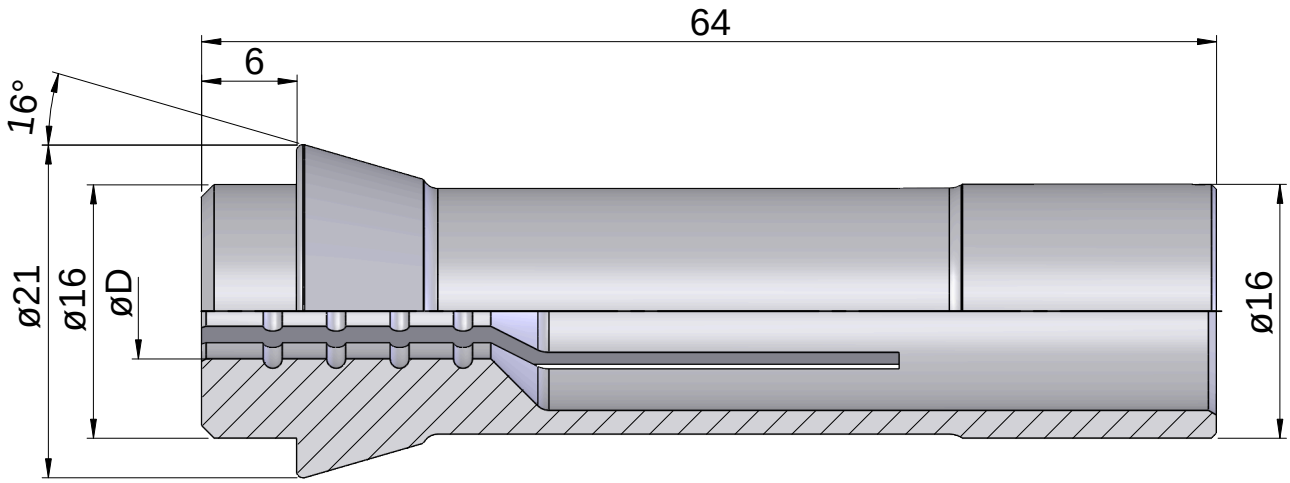

Documents

No downloads available for this product