# Guide bush T223 Ø=11,00

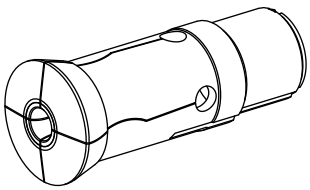

## Technical data

| | |
|---|---|
| **Clamping device size** | T223 deadlength |
| **manufacturer product line** | |
| **Clamping type** | with carbide insert |
| **Nominal diameter (mm)** | 11 Millimeter |
| **Clamping method** | External clamping |
| **Collet design** | programmable (Axfix) |
| **Collet version** | S-slot |
| **manufacturer product line** | Schlenker |

## Note

with bushing

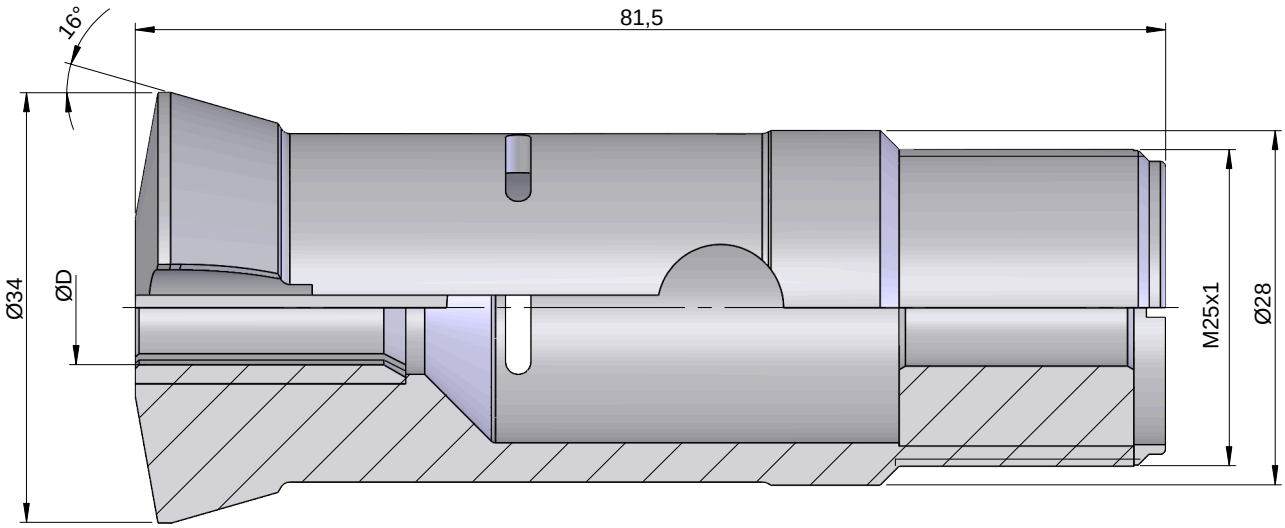
16°
81,5
Ø34
ØD
M25x1
Ø28

## Documents

No downloads available for this product