Probe holder VDI 40 Renishaw D11,2

Technical data

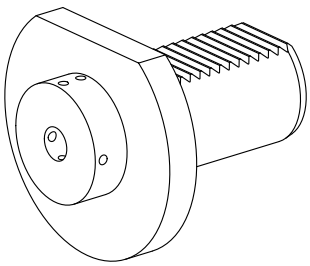

Shank VDI	VDI 40
Drive	not live
Fixation VDI	none
Mounting	Renishaw D11,2
reversable 180°	no
Data carrier	check tool station bore
X [mm]	24 (0.94")
Y [mm]	–
Z [mm]	–

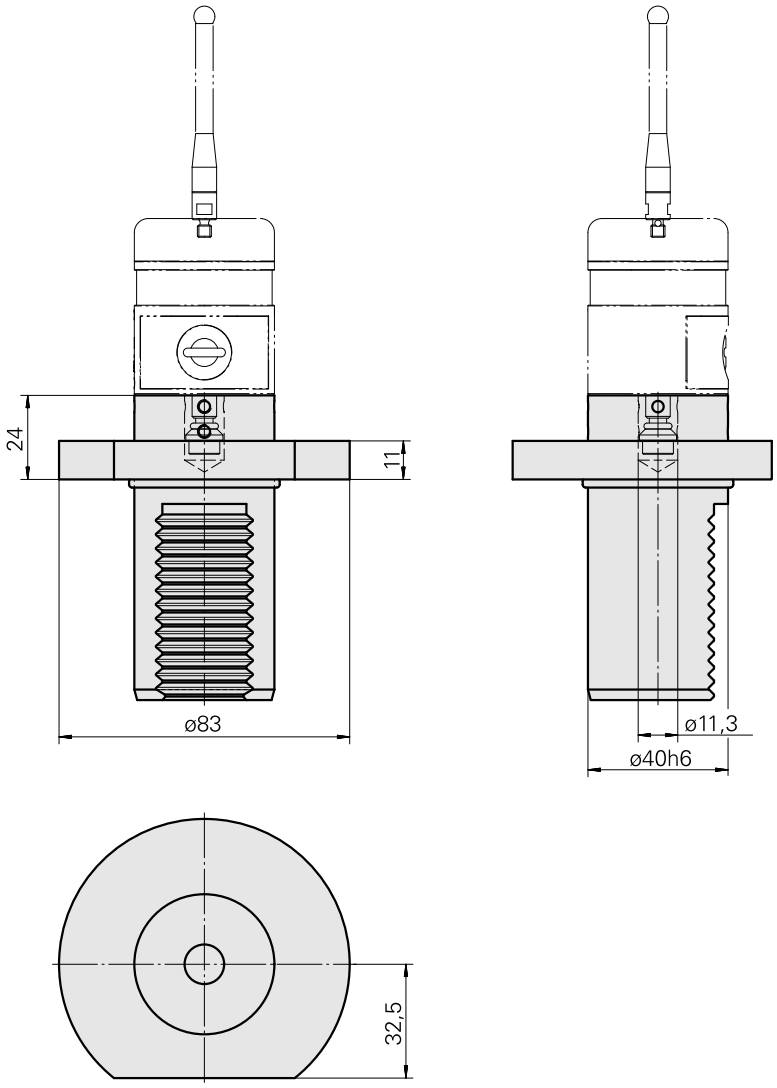

Documents

Product notes

DE (pdf)

FR (pdf)

EN (pdf)

Accessories

Required for operation

Not defined

Product ID : 12133465
Previous product ID :

Push-button insert

Product ID : 12133466
Previous product ID :

Probe

Product ID : 10338967
Previous product ID : 487542.1441

Optional accessories

Other accessories

Case A-2033-7001

Product ID : 10259626
Previous product ID : 487542.0911