INDEX CAPTO C3 for CC.. 09T3.., right, without gripper groove

Technical data

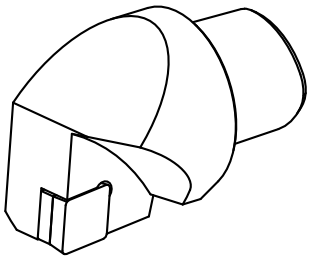

TH accessories category	INDEX CAPTO C3
Mounting	for CC.. 09T3..
Quick change inserts	Turning tool holder

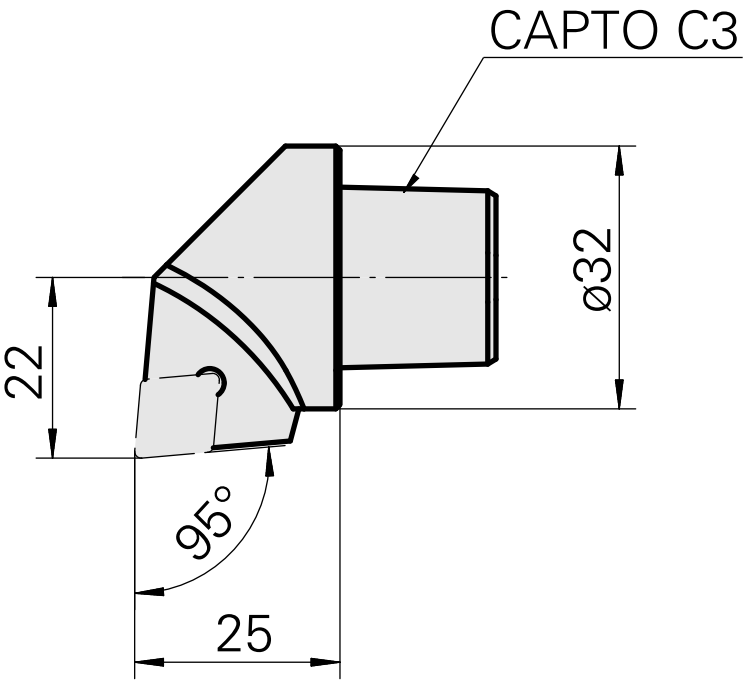

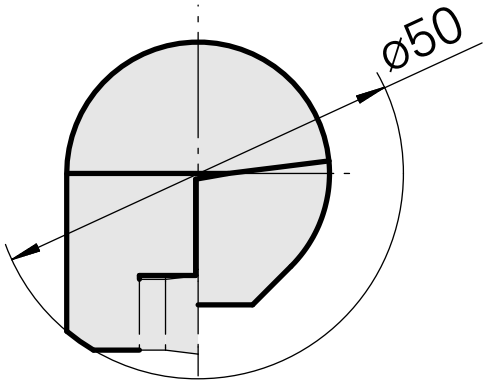

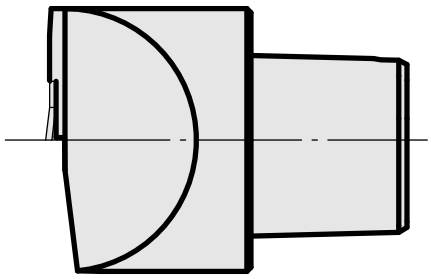

Documents

No downloads available for this product