Adapter mounting aid HSK 40

Technical data

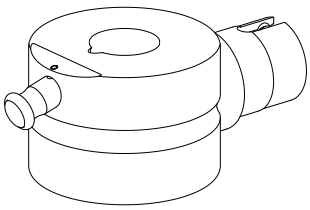

TH accessories category	Adapter mounting aid
Tool mounting	HSK 40

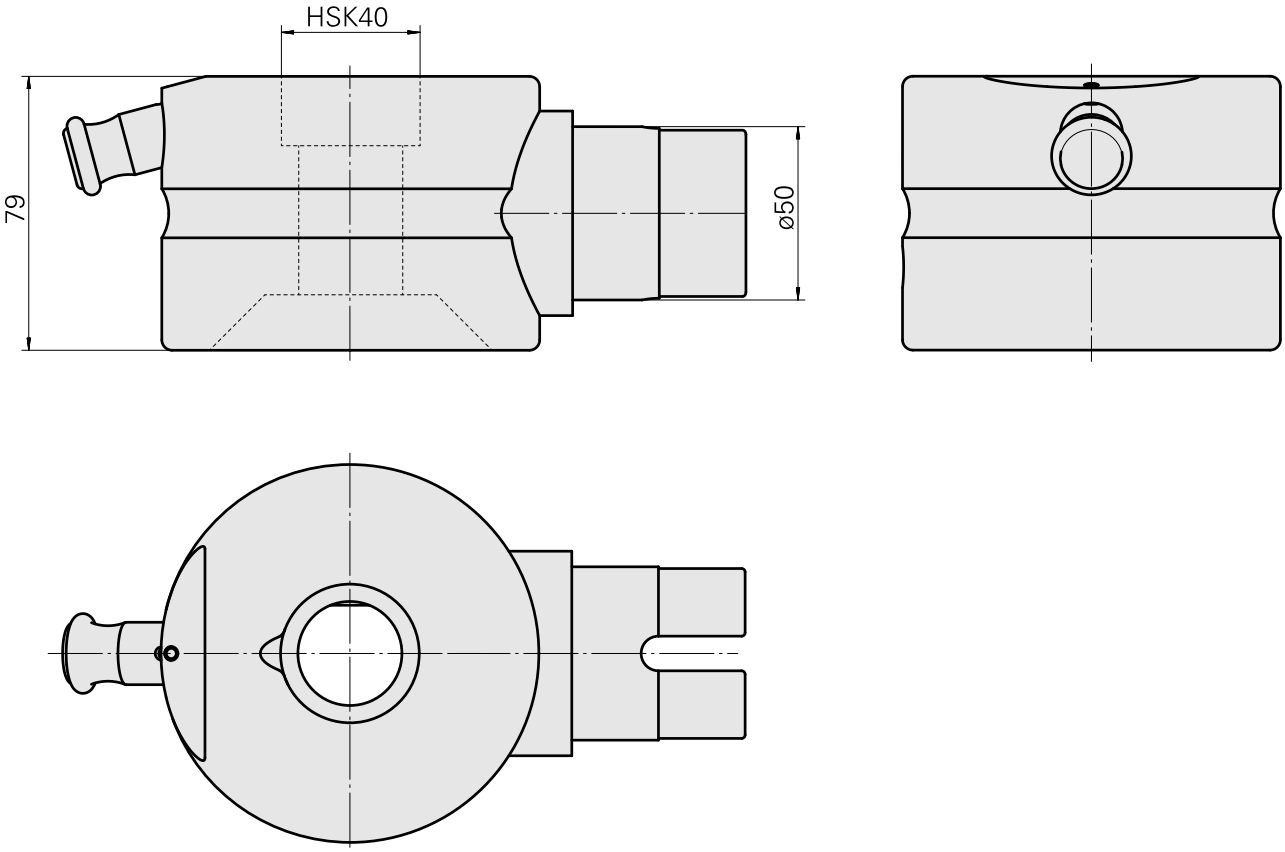

Documents

No downloads available for this product

Accessories

Optional accessories

Other accessories

Clamp

Product ID : 10311532
Previous product ID : W00014.0054