Compensation holder VDI 25 VDI 25

Technical data

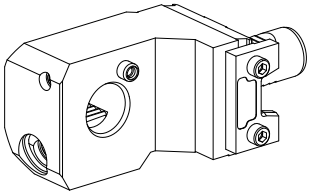

Shank VDI	VDI 25
Drive	not live
Fixation VDI	Vee bar
Cooling	internal
Pressure	80 bar
Mounting	VDI 25
reversable 180°	yes
X [mm]	70 (2.76")
Y [mm]	–
Z [mm]	2 (0.08)
INDEX TRAUB products	C42/65 • G160 • ABC • G200 • G200.2 • ABC.2

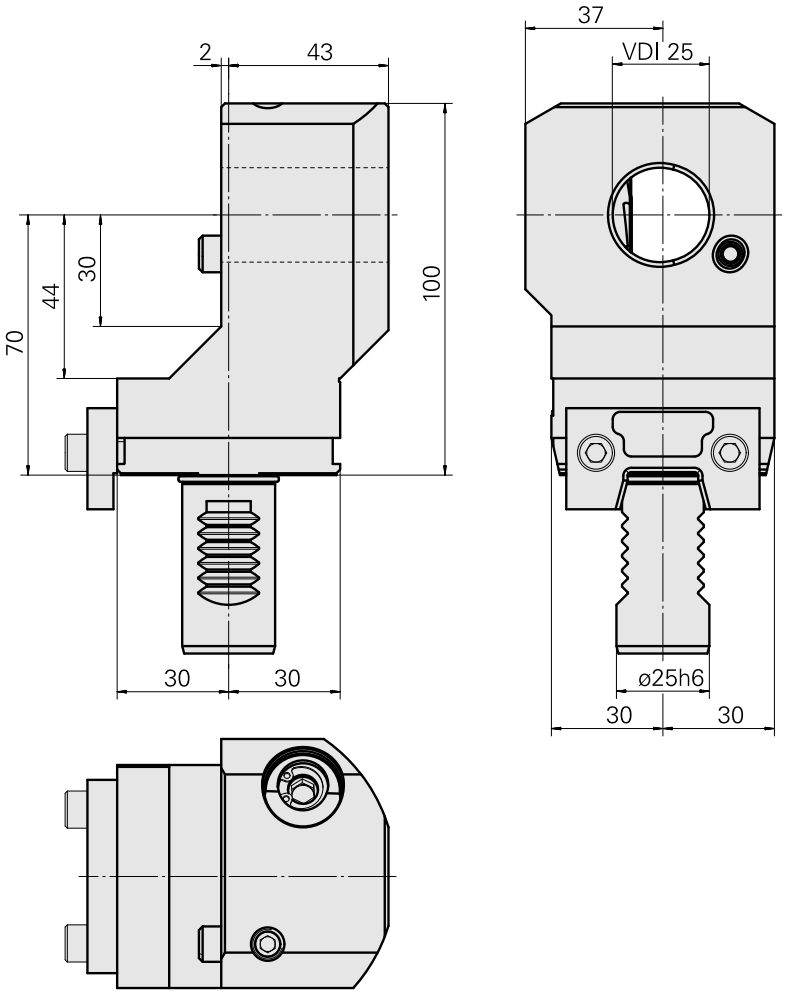

Documents

No downloads available for this product

Accessories

Optional accessories

Other accessories

Not defined

Product ID : 10096484
Previous product ID : WL3300.9120F