INDEX

Guide bush T229 Ø=11,00

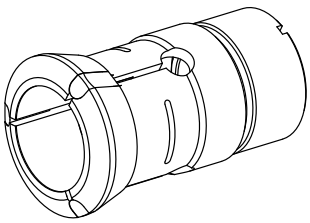

Technical data

Clamping device size	T229 deadlength
manufacturer product line	
Clamping type	with carbide insert
Nominal diameter (mm)	11 Millimeter
Clamping method	External clamping
Collet design	programmable (Axfix)
Collet version	Slots vulcanized (standard)
manufacturer product line	Schlenker

Note

with bushing

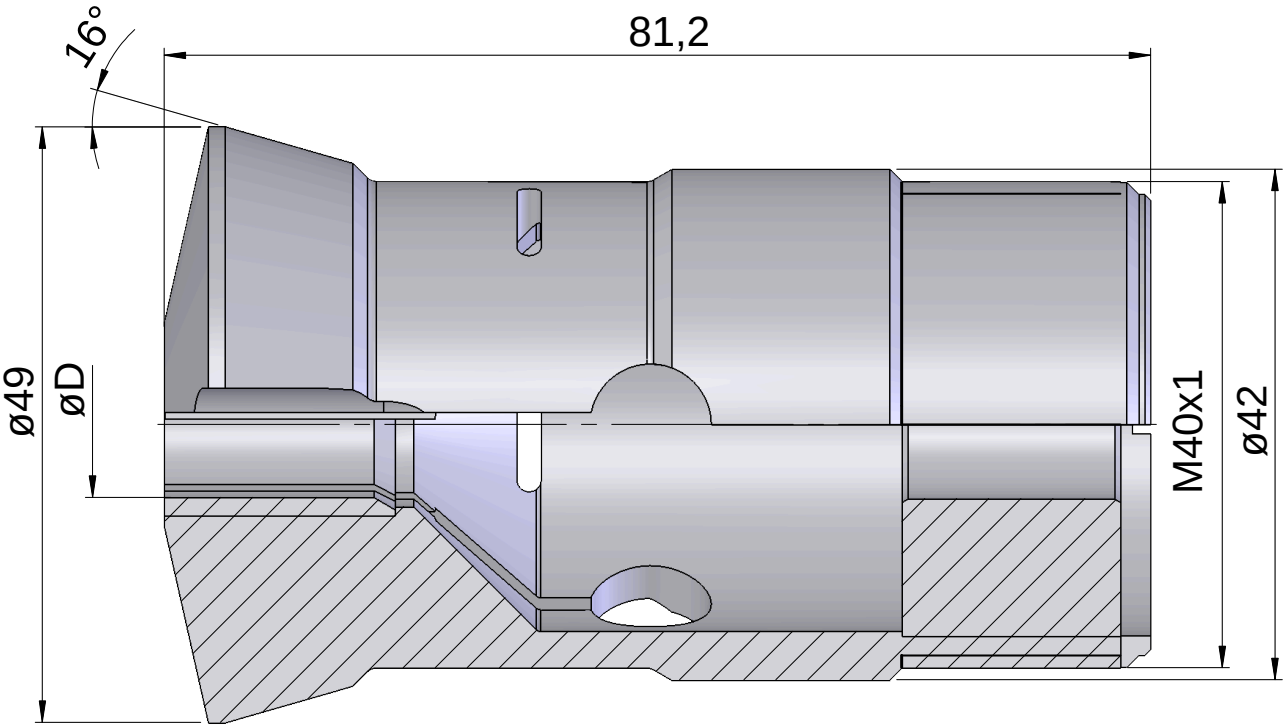
16°
81,2
ø49
øD
M40x1
ø42

Documents

No downloads available for this product