INDEX

Mount D25

Technical data

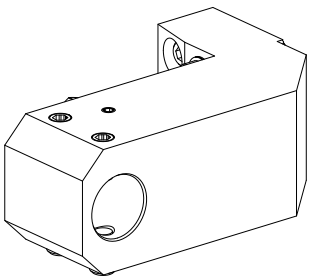

Drive	not live
Cooling	external
Pressure	80 bar
Mounting	D25
X [mm]	112.6 (4.43")
Y [mm]	–
Z [mm]	–
INDEX TRAUB products	MS16-6 • MS16-6 Plus

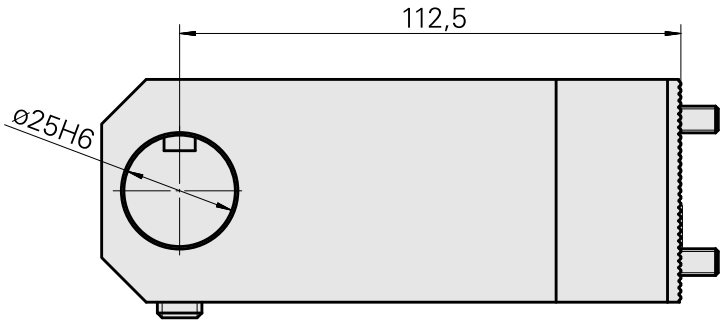

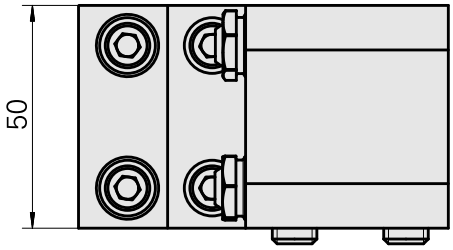

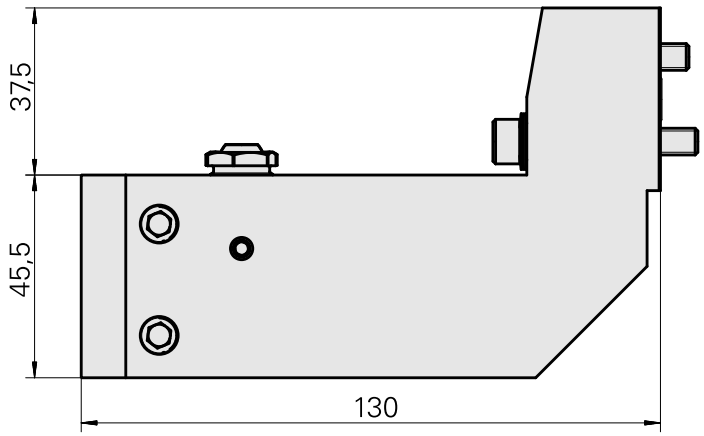

Documents

No downloads available for this product

Accessories

Optional accessories

Other accessories

Mounting sleeve with collar D25

Product ID : 10070544
Previous product ID : W62221.41--