INDEX

Adapter mounting aid VDI 20

Technical data

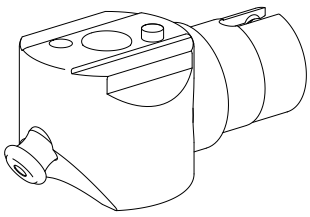

TH accessories category	Adapter mounting aid
Tool mounting	VDI 20

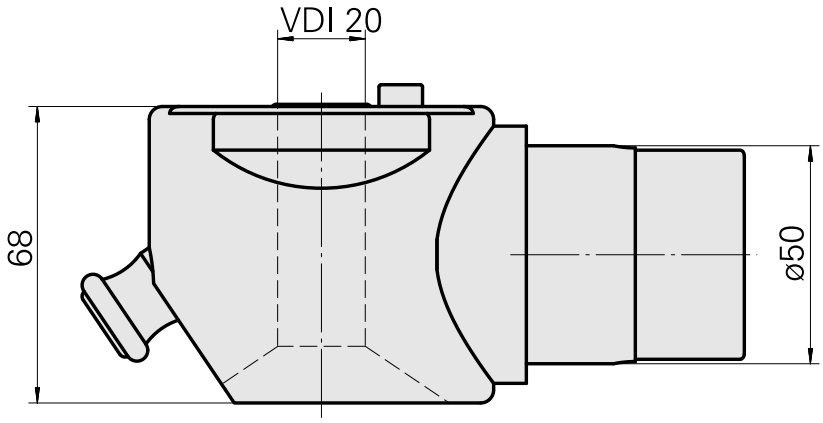

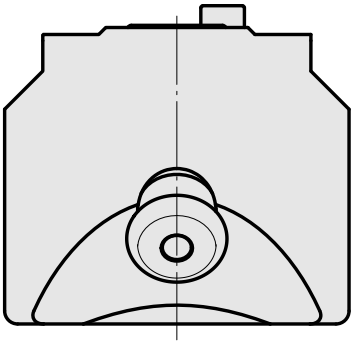

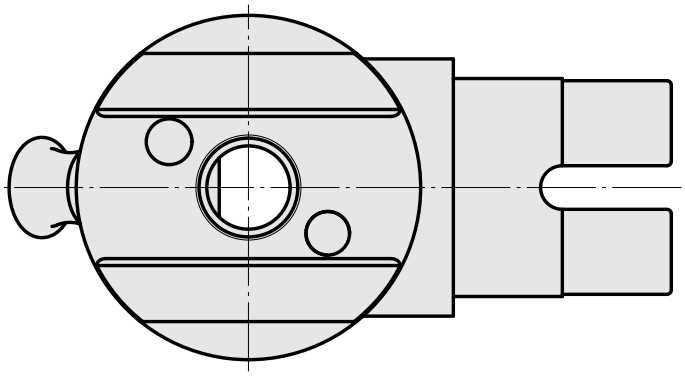

Documents

No downloads available for this product