10340647

INDEX

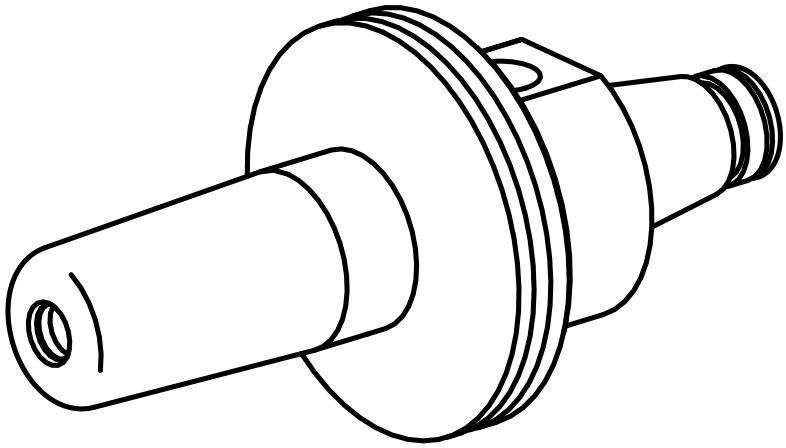

WFB 20-12

10340647

INDEX

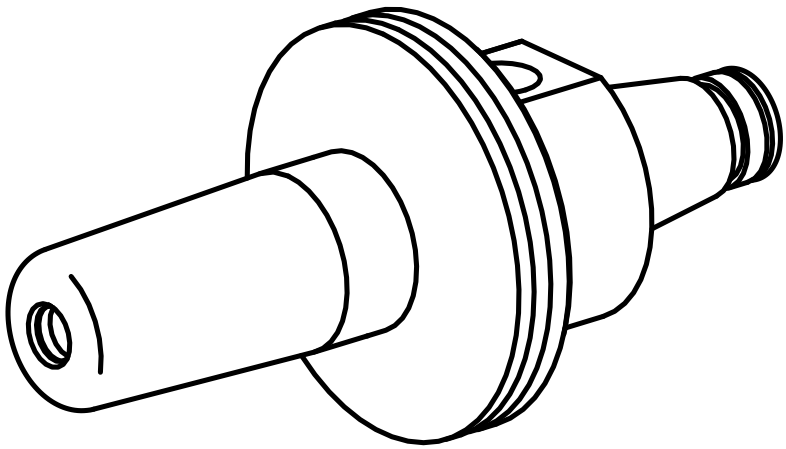

WFB 20-12