10084898 **INDEX**

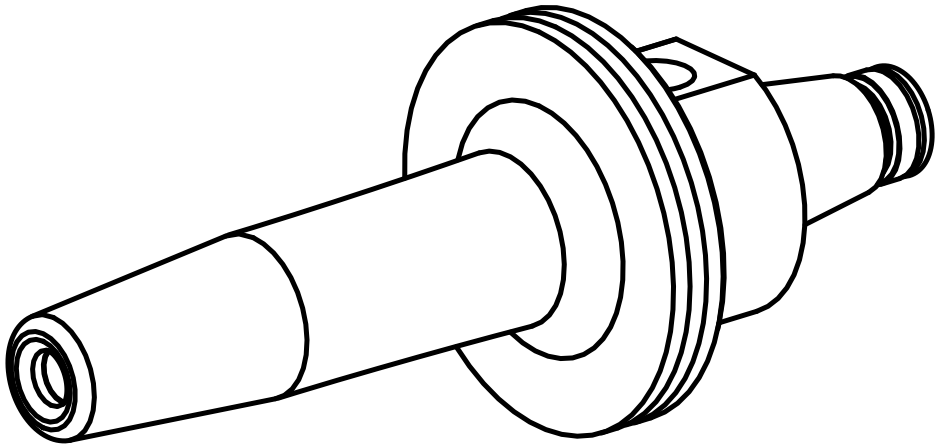

WFB 20-12

10084898 **INDEX**

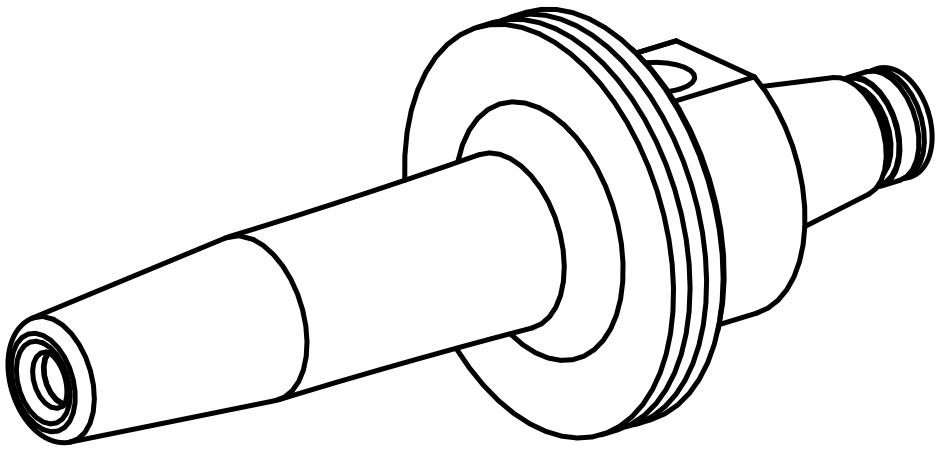

WFB 20-12