10921942

INDEX

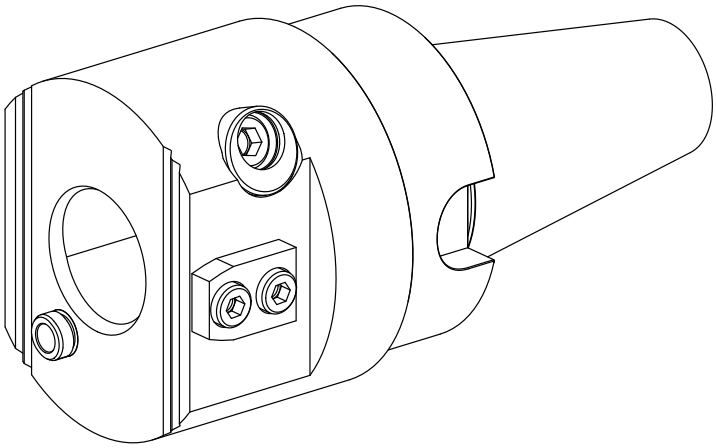

Adapter for presetting units

10921942

INDEX

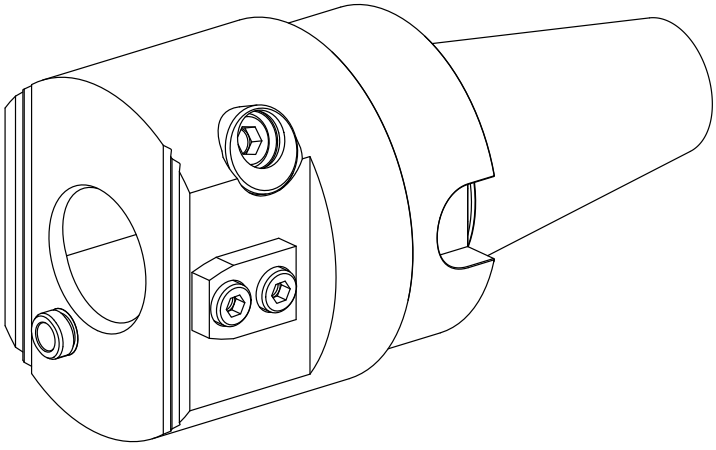

Adapter for presetting units