12124162

INDEX

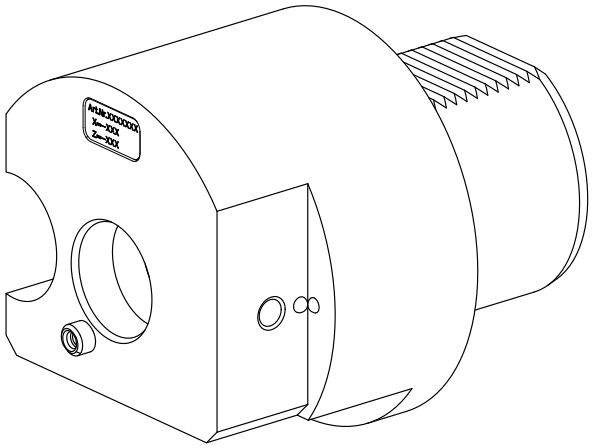

Adapter for presetting units

12124162

INDEX

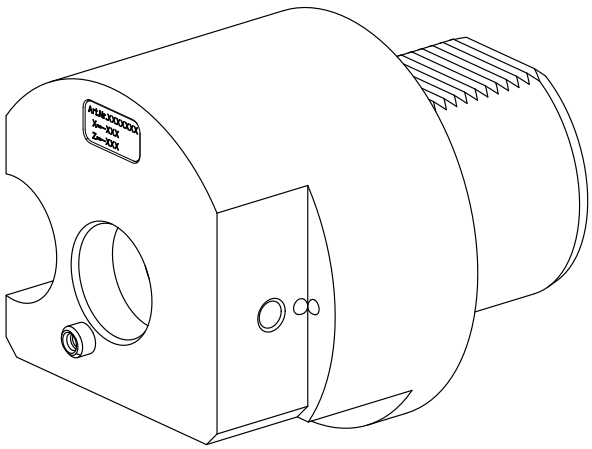

Adapter for presetting units