10531917 **INDEX**

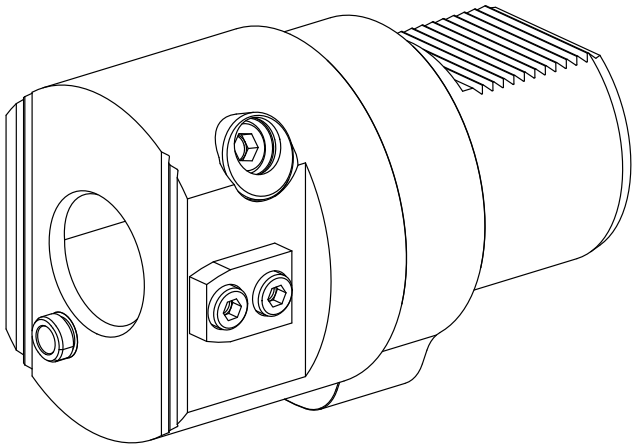

Adapter for presetting units

10531917 **INDEX**

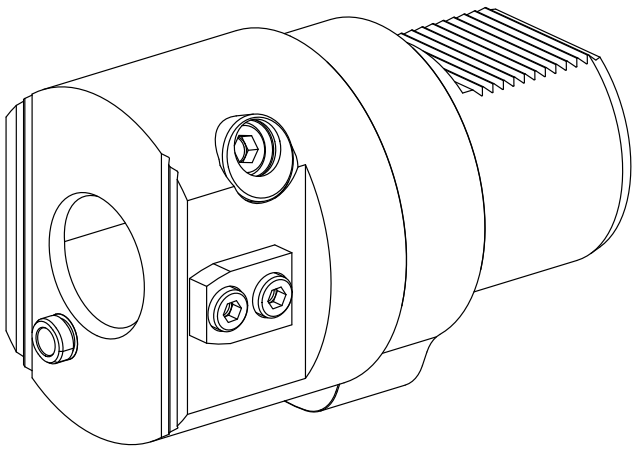

Adapter for presetting units