10017294

INDEX

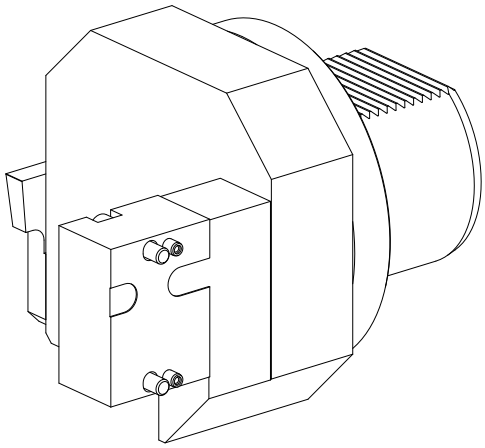

Adapter for presetting units

10017294

INDEX

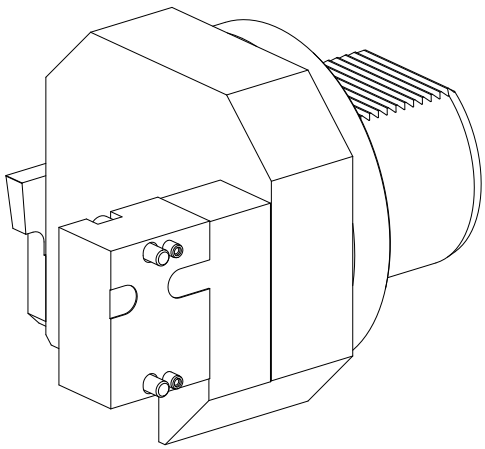

Adapter for presetting units