10165250

INDEX

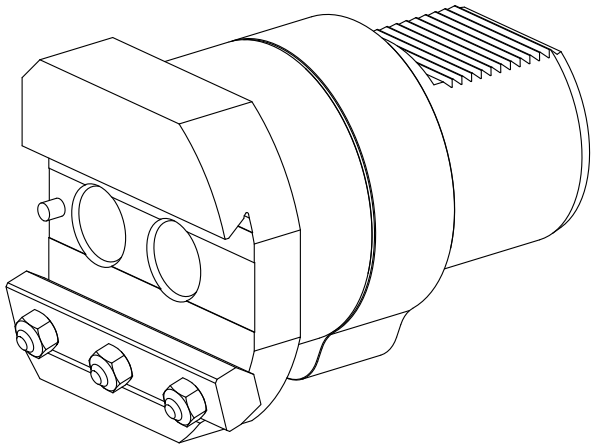

Adapter for presetting units

10165250

INDEX

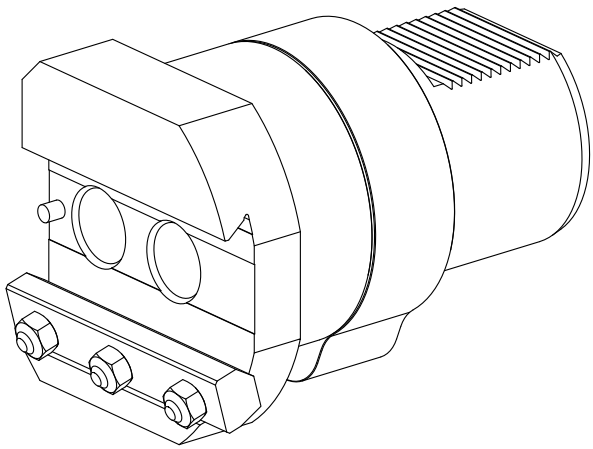

Adapter for presetting units